ELECTRICAL SYMBOLS LEGEND

NOT ALL SYMBOLS MAY BE REPRESENTED ON DRAWINGS

POWER SYMBOLS

—— ·· ——	SIGNIFIES TWO(2) CONDUCTORS 2#12 + 1#12 GRND. IN ½" CONDUIT.
—— ··· ——	SIGNIFIES THREE(3) CONDUCTORS 3#12 + 1#12 GRND. IN ½" CONDUIT.
—— ···· ——	SIGNIFIES FOUR(4) CONDUCTORS 4#12 + 1#12 GRND. IN ¾" CONDUIT.
—— ····· ——	SIGNIFIES FIVE(5) CONDUCTORS 5#12 + 1#12 GRND. IN ¾" CONDUIT.
—— ·· —— #10	SIGNIFIES TWO(2) CONDUCTORS 2#10 + 1#10 GRND. IN ¾" CONDUIT.
—— ··· —— #10	SIGNIFIES THREE(3) CONDUCTORS 3#10 + 1#10 GRND. IN ¾" CONDUIT.
—— ·· —— #8	SIGNIFIES TWO(2) CONDUCTORS 2#8 + 1#10 GRND. IN ¾" CONDUIT.
—— ··· —— #8	SIGNIFIES THREE(3) CONDUCTORS 3#8 + 1#10 GRND. IN ¾" CONDUIT.
—— ·· —— #6	SIGNIFIES TWO(2) CONDUCTORS 2#6 + 1#8 GRND. IN 1" CONDUIT.
—— ··· —— #6	SIGNIFIES THREE(3) CONDUCTORS 3#6 + 1#8 GRND. IN 1" CONDUIT.
	HOMERUN TO PANELBOARD
	LOW VOLTAGE CONTROL WIRING
JB	JUNCTION BOX (SIZE AS REQUIRED)
	CONDUIT/WIRE BREAK
	CONDUIT STUB OUT
	CONDUIT STUB–DOWN
	CONDUIT STUB–UP
	208Y/120V RECESSED OR SURFACE MOUNTED PANELBOARD
	480Y/277V RECESSED OR SURFACE MOUNTED PANELBOARD
	1ø POWER TERMINAL CONNECTION TO EQUIPMENT ITEM SUPPLIED BY OTHERS.
	3ø POWER TERMINAL CONNECTION TO EQUIPMENT ITEM SUPPLIED BY OTHERS.
HP	ELECTRIC MOTOR – PROVIDED & INSTALLED BY OTHERS, WIRE BY E.C. XX = HORSE POWER RATING
	RECEPTACLE (SIMPLEX)
	RECEPTACLE (DUPLEX)
	RECEPTACLE (QUAD)
USB	RECEPTACLE (DUPLEX WITH 2 USB CHARGING PORTS) DECORATOR STYLE
	RECEPTACLE (DUPLEX) W/ GROUND FAULT PROTECTION
	RECEPTACLE (QUAD) W/ GROUND FAULT PROTECTION
WP	RECEPTACLE (DUPLEX) W/ GROUND FAULT PROTECTION & A WEATHERPROOF COVER
— - - —	PLUGMOLD
ES	120V ELECTRONIC DOOR STRIKE. SUPPLIED & INSTALLED BY OTHERS, WIRED BY E.C.
	"SPECIAL" RECEPTACLE – VERIFY NEMA TYPE AND INSTALLATION LOCATION IN FIELD.
FB#	RECESSED FLOOR BOX – TO BE INSTALLED FLUSH WITHIN FINISHED FLOOR
	POWER POLE WITH DIVIDER FOR POWER AND COMMUNICATIONS WIRING.
$ MS	MANUAL MOTOR STARTER
	MAGNETIC MOTOR STARTER
J	COMBINATION MOTOR STARTER/FUSED DISCONNECT SWITCH
J	NON–FUSED DISCONNECT SWITCH
F J	FUSED DISCONNECT SWITCH

LIGHTING CONTROL SYMBOLS

$	TOGGLE SWITCH (SINGLE–POLE)
$ II,III,IV	TOGGLE SWITCHES (SINGLE–POLE, GANGED)
$ 3	TOGGLE SWITCH (SINGLE–POLE, 3–WAY)
$ 3,II,III,IV	TOGGLE SWITCH (SINGLE–POLE, 3–WAY, GANGED)
$ 4	TOGGLE SWITCH (SINGLE–POLE, 4–WAY)
$ K	KEYED SWITCH (SINGLE–POLE)
$ T	TIME DELAY SWITCH (SINGLE–POLE)
$ PL	PILOT LIGHT SWITCH (SINGLE–POLE)
$ D	DIMMER (SINGLE–POLE)
$ D,II,III,IV	DIMMER (SINGLE–POLE, GANGED – 2, 3, 4 ETC.)
$ K	KEYED SWITCH (SINGLE–POLE)
$ M	MOMENTARY CONTACT SWITCH (SINGLE–POLE)
$ D1	LINE–VOLTAGE WIRELESS WALL SWITCH CONTROLLER PROVIDING ON/OFF DIMMING CONTROL WITH JOT ENABLED WIRELESS COMMUNICATION. ACUITY CONTROLS – #SPODMRA–JOT–DX–(TBD)
$ OS	DUAL TECHNOLOGY WALL SWITCH OCCUPANCY SENSOR ACUITY CONTROLS – SENSOR SWITCH #WSX–PDT–SA–WH (OR EQUAL)
OS	LOW–VOLTAGE, DUAL TECHNOLOGY, SMALL MOTION CEILING OCCUPANCY SENSOR. ACUITY CONTROLS – SENSOR SWITCH #CM–PDT–9 (OR EQUAL)
PC	EXTERIOR REMOTE PHOTOCELL TORK MODEL #2101 OR EQUAL.
TC#	DIGITAL TIME CLOCK

COMMUNICATION SYMBOLS

	TELEPHONE / NETWORK DATA JACK – SEE "COMMUNICATION DEVICE SCHEDULE" FOR FURTHER INFORMATION
M#	MEDIA BOX – SEE "COMMUNICATION DEVICE SCHEDULE" FOR FURTHER INFORMATION

FIRE ALARM SYMBOLS

FACP	FIRE ALARM CONTROL PANEL
AP	FIRE ALARM REMOTE ANNUNCIATOR PANEL
F	FIRE ALARM PULLSTATION – INSTALL 48" A.F.F. TO CENTER OF BOX
CM	CARBON MONOXIDE DETECTOR WITH AUDIBLE BASE. WIRE INTO SUPERVISORY CIRCUITS OF BUILDING FIRE ALARM SYSTEM. INSTALL @ FINISHED CEILING.
S	PHOTOELECTRIC SMOKE DETECTOR WITH STANDARD BASE. WIRE INTO INITIATING CIRCUITS OF BUILDING FIRE ALARM SYSTEM. INSTALL @ FINISHED CEILING.
CS	COMBINATION CARBON MONOXIDE / PHOTOELECTRIC SMOKE DETECTOR WITH AN AUDIBLE BASE. WIRE INTO INITIATING / SUPERVISORY / SIGNALING CIRCUITS OF BUILDING FIRE ALARM SYSTEM. INSTALL @ FINISHED CEILING.
H	HEAT DETECTOR – FIXED TEMPERATURE OF 135°, WIRED INTO INITIATING CIRCUITS OF BUILDING FIRE ALARM SYSTEM. INSTALL @ FINISHED CEILING.
CH	COMBINATION CARBON MONOXIDE / HEAT DETECTOR, FIXED TEMPERATURE OF 135° WITH AN AUDIBLE BASE. WIRE INTO INITIATING / SUPERVISORY / SIGNALING CIRCUITS OF BUILDING FIRE ALARM SYSTEM. INSTALL @ FINISHED CEILING.
DS	DUCT SMOKE DETECTOR – WIRED INTO INITIATING CIRCUITS OF BUILDING FIRE ALARM SYSTEM. INSTALL WITHIN HVAC DUCTWORK.
A	AUDIO DEVICE (WALL) – WIRED INTO SIGNALING CIRCUITS OF BUILDING FIRE ALARM SYSTEM. INSTALL 80" A.F.F. TO BOTTOM OF BOX
V	VISUAL DEVICE (WALL) – WIRE INTO SIGNALING CIRCUITS OF BUILDING FIRE ALARM SYSTEM. INSTALL 80" A.F.F. TO BOTTOM OF BOX
AV	COMBINATION AUDIO/VISUAL DEVICE (WALL) – WIRE INTO SIGNALING CIRCUITS OF BUILDING FIRE ALARM SYSTEM. INSTALL 80" A.F.F. TO BOTTOM OF BOX
A	AUDIO DEVICE (CEILING) – WIRED INTO SIGNALING CIRCUITS OF BUILDING FIRE ALARM SYSTEM. INSTALL @ FINISHED CEILING.
V	STROBE DEVICE (CEILING) – WIRED INTO SIGNALING CIRCUITS OF BUILDING FIRE ALARM SYSTEM. INSTALL @ FINISHED CEILING.
AV	COMBINATION AUDIO/VISUAL DEVICE (CEILING) – WIRED INTO SIGNALING CIRCUITS OF BUILDING FIRE ALARM SYSTEM. INSTALL @ FINISHED CEILING.
HDH	MAGNETIC DOOR HOLDER – TO BE INSTALLED WITHIN WALL & WIRED INTO BUILDING FIRE ALARM SYSTEM AS REQUIRED.
FL	FLOW SWITCH – PROVIDED & INSTALLED BY SPRINKLER CONTRACTOR, WIRED INTO BUILDING FIRE ALARM SYSTEM BY ELECTRICAL CONTRACTOR.
TA	TAMPER SWITCH – PROVIDED & INSTALLED BY SPRINKLER CONTRACTOR, WIRED INTO BUILDING FIRE ALARM SYSTEM BY ELECTRICAL CONTRACTOR.
MM	MONITORING MODULE
CM	CONTROL MODULE
RT	REMOTE TEST STATION

LIGHTING FIXTURE SCHEDULE

SYMBOL	DESCRIPTION	LAMP (QTY/TYPE/COLOR)	VOLT	VA	MOUNTING	MANUFACTURER/MODEL #
A	4" APERTURE LED DOWNLIGHT WITH CLEAR TRIM, SEMI–SPECULAR REFLECTOR AND 0–10V DIMMING *ENERGY STAR LISTED*	LED/3500°K/750 LUMENS	120/277V	10W	RECESSED	LITHONIA LIGHTING: LDN4–35/07–L04–AR–LS–MVOLT–D10
B	2'X4' LED FLAT PANEL WITH A WHITE PRISMATIC LENS AND 0–10V DIMMING DRIVER. *DLC LISTED*	LED/3500°K/4800 LUMENS	120/277V	39W	LAY–IN	LITHONIA LIGHTING: CPX–2X4–4000LM–80CRI–35K–A12–MIN10–ZT–MVOLT–
B1	2'X4' LED FLAT PANEL WITH A WHITE PRISMATIC LENS AND 0–10V DIMMING DRIVER WITH JOT ENABLED WIRELESS CONTROL. *DLC LISTED* UTILIZE CLARITY APP FOR REQUIRED PROGRAMMING.	LED/3500°K/4800 LUMENS	120/277V	39W	LAY–IN	LITHONIA LIGHTING: CPX–2X4–4000LM–80CRI–35K–A12–MIN10–ZT–JOTVTX15–MVOLT–
C	2'X2' LED FLAT PANEL WITH A WHITE PRISMATIC LENS AND 0–10V DIMMING DRIVER. *DLC LISTED*	LED/3500°K/3200 LUMENS	120/277V	31W	LAY–IN	LITHONIA LIGHTING: CPX–2X2–3200LM–80CRI–35K–A12–MIN10–ZT–MVOLT–
X1	EXIT SIGN, UNIVERSAL MOUNT WITH CANOPY, WHITE IMPACT & SCRATCH RESISTANT THERMOPLASTIC HOUSING, 8" STENCILED RED LETTERS WITH LED LAMPS & AN INTEGRAL BATTERY PACK.	LED – FURNISHED WITH FIXTURE	120/277V	N/A	CEILING/WALL (+7'–6"A.F.F.) TBD BY E.C.	LITHONIA LIGHTING: "QUANTUM" LQM–S–W–3–R–120/277–ELN
X2	COMBINATION LED EXIT SIGN / EMERGENCY LIGHTING UNIT, UNIVERSAL MOUNT WITH CANOPY, WHITE IMPACT & SCRATCH RESISTANT THERMOPLASTIC HOUSING, 8" STENCILED RED LETTERS WITH, TWIN ADJUSTABLE HEADS FOR EMERGENCY LIGHTING & AN INTEGRAL BATTERY PACK.	LED (EXIT), TWO 1.5W/LEDs FURNISHED WITH FIXTURE	120/277V	N/A	CEILING/WALL (+7'–6"A.F.F.) TBD BY E.C.	LITHONIA LIGHTING: "QUANTUM" LHQM–LED–R
E1	EMERGENCY LED LIGHTING UNIT WITH A WHITE IMPACT & SCRATCH RESISTANT THERMOPLASTIC HOUSING, TWIN ADJUSTABLE HEADS & AN INTEGRAL BATTERY PACK.	TWO 2.4W/220 LUMEN LEDs FURNISHED WITH FIXTURES	120/277V	N/A	WALL +7'–6" A.F.F.	LITHONIA LIGHTING: "QUANTUM" ELM2L

EXIT SIGN SYMBOL LEGEND

SINGLE FACE	DOUBLE FACE	SINGLE FACE DIRECTIONAL	DOUBLE FACE DIRECTIONAL
X#	X#	X#	X#

EXAMPLE OF THE TYPICAL LABELS FOR ALL LIGHTING FIXTURES. LABELS MAY BE REPOSITIONED ON DRAWINGS TO ACCOMMODATE A SPECIFIC LAYOUT.

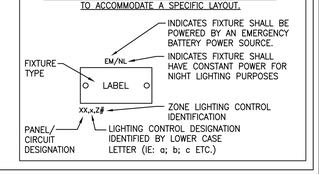

AS A REQUIREMENT FOR ALL PROSPECTIVE BIDDERS SHALL:

a. VISIT THE SITE PRIOR TO BID SUBMISSION

b. FIELD VERIFY ALL MEASUREMENTS

c. GENERATE A COMPREHENSIVE LIST DETAILING SITE CONDITIONS FOR FIELD PERSONNEL.

THE SUCCESSFUL BIDDING CONTRACTOR SHALL:

a. REVIEW ENTIRE DRAWING PACKAGE AND EFFECTIVELY COORDINATE ELECTRICAL INSTALLATION WITH ALL OTHER TRADES.

b. COORDINATE ALL BUILDING INTERCONNECTIONS AND POWER SYSTEMS SHUTDOWN WITH OWNER.

c. PROVIDE ONE COMPLETE SET OF AS–BUILD DRAWINGS TO THE ENGINEER OF RECORD AND ONE TO THE OWNER.

COMMUNICATION DEVICE SCHEDULE

SYMBOL	DESCRIPTION	WALLPLATE/MEDIA BOX MODEL #'S
4	6–PORT, QUICKPORT WALLPLATE INSTALLED 18"A.F.F., UNLESS OTHERWISE NOTED. WALLPLATE SHALL RECEIVE THE FOLLOWING RJ–45 CONNECTOR: *ONE(1) IVORY CATEGORY 6 FOR VoIP NETWORK CABLE (LEVITON #61110–RI6). *FIVE(5) BLANK IVORY INSERTS	LEVITON: #41080–6IP
M1	2–GANG RECESSED STEEL MEDIA BOX FOR INSTALLATION OF ONE(1) DUPLEX RECEPTACLE AND UP TO SIX(6) COMMUNICATION CONNECTORS. INSTALL 65"A.F.F., UNLESS OTHERWISE NOTED. SUPPLY AND INSTALL THE FOLLOWING FOR INSTALLATION IN MEDIA BOX: *ONE(1) DUPLEX RECEPTACLE WITH COVERPATE (WHITE) *ONE(1) 6–PORT WALLPLATE (LEVITON #41080–6WP) WITH THE FOLLOWING: –ONE(1) F–CONNECTOR FEED THROUGH (LEVITON #40831–WH). –ONE(1) HDMI FEED THROUGH CONNECTOR (40834–OOW). PROVIDED FOR OWNER USE AS NEEDED. –ONE(1) WHITE CATEGORY 6 FOR VoIP NETWORK CABLE (LEVITON #61110–RW6). –THREE(3) BLANK WHITE INSERTS INSTALL 1¼" EMT CONDUIT FROM LOW–VOLTAGE SIDE OF MEDIA J–BOX TO ACCESSIBLE CEILING SPACE FOR INSTALLATION OF CURRENT AND FUTURE CABLING.	LEGRAND–PASS & SEYMOUR: TV2MW

GENERAL NOTES TO COMMUNICATION DEVICE SCHEDULE:

a. CATEGORY 6 PLENUM RATED CABLE CONTAINS FOUR TWISTED PAIRS. A 4 PRECEDING THE SYMBOL INDICATES ONE CABLE, AN 8 INDICATES TWO CABLES...ETC.

b. CONTRACTOR SHALL PROVIDE COMMUNICATIONS INSTALLATION INCLUSIVE OF ALL REQUIRED ELECTRICAL BOXES, CABLE, CONDUIT, WALL PLATES, CONNECTORS, TERMINATIONS, TESTING, LABELING ETC. TO OBTAIN A 100% COMPLETE INSTALLATION.

c. IVORY WALL PLATES AND ASSOCIATED CONNECTOR COLORS SHALL BE CONFIRMED WITH ARCHITECT / INTERIOR DESIGNER PRIOR TO ORDERING. FINAL COLOR SELECTION SHALL MATCH ALL ELECTRICAL DEVICES COLORS UTILIZED THROUGHOUT SPACE.

GENERAL SYMBOLS & ABBREVIATION

NOT ALL ABBREVIATIONS MAY BE REPRESENTED ON DRAWINGS

— — — SIGNIFIES EXISTING ELECTRICAL EQUIPMENT/ DEVICES TO REMAIN	
— — — SIGNIFIES EXISTING ELECTRICAL EQUIPMENT/ DEVICES TO BE REMOVED	
X	KEYNOTE
	REVISION TAG
Φ	PHASE
A	AMPERES
AC	ALTERNATING CURRENT
A/C	AIR CONDITIONING
AF	AMPERE FRAME
AFF	ABOVE FINISHED FLOOR
AHU	AIR HANDLING UNIT
AIC	AMPERE INTERRUPTING CAPACITY
AL	ALUMINUM
AT	AMPERE TRIP
ATS	AUTOMATIC TRANSFER SWITCH
AWG	AMERICAN WIRE GAUGE
C	CONDUIT
CATV	CABLE TELEVISION
CB	CIRCUIT BREAKER
C.C.	CIVIL CONTRACTOR
CCTV	CLOSED CIRCUIT TELEVISION
CD	CANDELA
CKT	CIRCUIT
CLF	CURRENT LIMITING FUSE
CM	CEILING MOUNT
CPT	CONTROL POWER TRANSFORMER
CT	CURRENT TRANSFORMER
CU	COPPER
DC	DIRECT CURRENT
DIA	DIAMETER
E.C.	ELECTRICAL CONTRACTOR
EF	EXHAUST FAN
ELEV	ELEVATOR
EM	EMERGENCY
EMT	ELECTRICAL METALLIC TUBING
EPO	EMERGENCY POWER OFF
EX	EXISTING
EXR	EXISTING TO BE RELOCATED
EWC	ELECTRIC WATER COOLER
F	FUSE
FAA	FIRE ALARM ANNUNCIATOR
FCU	FAN COIL UNIT
FLA	FULL LOAD AMPERES
FMC	FLEXIBLE METAL CONDUIT
G	GROUND
G.C.	GENERAL CONTRACTOR
GFI	GROUND FAULT CIRCUIT INTERRUPTER
GND	GROUND
GRC	GALVANIZED RIGID STEEL CONDUIT
HOA	HAND–OFF–AUTOMATIC SWITCH
HACR	HEATING AIR CONDITION, REFRIGERATION C.B.
HVAC	HEATING, VENTILATION, AIR CONDITIONING
HZ	HERTZ
IG	ISOLATED GROUND
IMC	INTERMEDIATE METAL CONDUIT
INT	INTERLOCK
KCMIL	THOUSAND CIRCULAR MILS
KVA	KILOVOLT–AMPERES
KVAR	KILOVOLT–AMPERES REACTIVE
LC	LIGHTING CONTACTOR
LFMC	LIQUID TIGHT FLEXIBLE METAL CONDUIT
MAU	MAKE–UP AIR UNIT
M.C.	MECHANICAL CONTRACTOR
MCA	MINIMUM CIRCUIT AMPS
MCB	MAIN CIRCUIT BREAKER
MCC	MOTOR CONTROL CENTER
MCP	MOTOR CIRCUIT PROTECTION
MIN	MINIMUM
MLO	MAIN LUGS ONLY
NA	NOT APPLICABLE
NAC	NOTIFICATION APPLIANCE CIRCUIT
NC	NORMALLY CLOSED
NEC	NATIONAL ELECTRICAL CODE
NFPA	NATIONAL FIRE PROTECTION ASSOCIATION
NL	NIGHT LIGHT
NO	NORMALLY OPEN
NTS	NOT TO SCALE
OC	OVER COUNTER
OHE	OVER HEAD ELECTRIC
PB	PULL BOX
P.C.	PLUMBING CONTRACTOR
PNL	PANEL
PWR	POWER
PT	POTENTIAL TRANSFORMER
PVC	RIGID NON–METALLIC CONDUIT
QTY	QUANTITY
RE	REPLACE EXISTING
RMC	RIGID METAL CONDUIT
RTS	REMOTE TEST STATION
RTU	ROOF TOP UNIT
S.C.	STRUCTURAL CONTRACTOR
ST	SHUNT TRIP
TBD	TO BE DETERMINED BY EC
UC	UNDER GROUND COMMUNICATIONS
UGE	UNDER GROUND ELECTRIC
UL	UNDERWRITERS LABORATORY
V	VOLT
VA	VOLT–AMPERE
W	WATT
WG	WIRE GUARD
WP	WEATHER PROOF
XFMR	TRANSFORMER

NOTICE

This document, the property of, prepared and issued by the architect, is submitted for the specific project namely _____ and the recipient by accepting this document assumes custody and agrees that this document will not be copied or reproduced in part or in whole, and any special features peculiar to this design shall not be incorporated in any other project, unless prior agreement has been obtained in writing.These documents will be returned immediately upon completion of the project or upon the request of the architect.
This document is the exclusive property of the architect, no rights to ownership are transferable, or shall be lost by the filing of this document with any and all public authorities for the purpose of compliance with Codes and or Ordinances, i.e. Building Permit, etc.

EBS ENGINEERING, PC
ENGINEERED BUILDING SYSTEMS
MECHANICAL / ELECTRICAL ENGINEERS
2568 WALDEN AVENUE
SUITE 107
CHEEKTOWAGA, NEW YORK 14225
PHONE: (716) 836-9600
FAX: (716) 836-9636
EMAIL: MAIL@EBSPE.COM
WEBSITE: WWW.EBSPE.COM

COPYRIGHT © 2021 ENGINEERED BUILDING SYSTEMS

Bryant & Stratton
1259 Central Ave.
Albany, NY 12205

ISSUE:
2021-06-29: BID/PERMIT SET

SA PROJECT TEAM: PRINCIPAL P.Silvestri
PROJ. ARCH. S.Hunt DRAFTER _____
JOB CAPT. _____ INTERIORS N.Catuzza

SEAL:

TITLE:
ELECTRICAL SCHEDULES & NOTES

SILVESTRI ARCHITECTS · PC
1321 MILLERSPORT HWY PH. 716.691.0900
AMHERST, NY 14221 FAX 716.691.4773

SA JOB #: 14082.07
DATE: 6-29-2021

DRAWING #: E-1

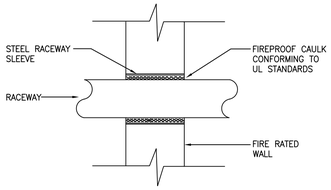

GENERAL NOTES:

a. ELECTRICAL CONTRACTOR SHALL PROVIDE NECESSARY PENETRATIONS FOR CONDUIT SLEEVES AND FIRESTOP AS INDICATED ABOVE. THIS DETAIL IS TYPICAL TO ALL FLOOR TO FLOOR AND FIREWALL PENETRATIONS.

1 E-2 RACEWAY PENETRATION THRU FIRE RATED WALL/CEILING

SCALE: N.T.S. Electrical Detail

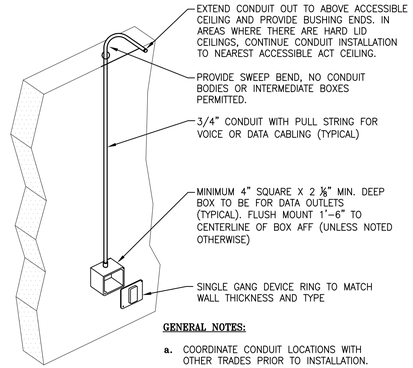

GENERAL NOTES:

a. COORDINATE CONDUIT LOCATIONS WITH OTHER TRADES PRIOR TO INSTALLATION.

2 E-2 COMMUNCATIONS (DATA/TELEPHONE) BOX AND CONDUIT INSTALLATION DETAIL

SCALE: N.T.S. Electrical Detail

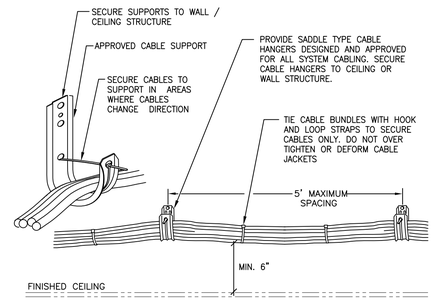

GENERAL NOTES:

a. LOCATE CABLE BUNDLES A MINIMUM OF 6" ABOVE REMOVABLE CEILINGS TO MAINTAIN CLEARANCE ALONG WALLS WHERE POSSIBLE. LOCATE IN AREAS THAT ARE ACCESSIBLE.
b. USE 2 OR MORE CABLE HANGERS AT ALL TURNS TO MAINTAIN MANUFACTURER'S BEND RADIUS REQUIREMENTS.

3 E-2 TYPICAL J-HOOK INSTALLATION

SCALE: N.T.S. Electrical Detail

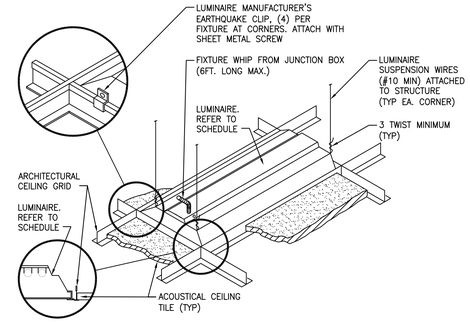

4 E-2 LUMINAIRE MOUNTING - LAY-IN CEILING

SCALE: N.T.S. Electrical Detail

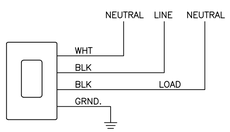

GENERAL NOTES:

a. DETAIL SHOWN FOR REFERENCE ONLY. INSTALL AND WIRE PER MANUFACTURE INSTRUCTIONS.
b. PROGRAMMING FUNCTIONS SHALL REMAIN AT DEFAULT SETTING EXCEPT FOR AS FOLLOWS:
  -OCCUPANCY TIME DELAY = 15 MINUTES
  -ON MODE = SET FOR MANUAL ON CONTROL (OFFICES, CONFERENCE RMS., JANITOR CLOSETS, STORAGE RMS, ETC. PER IECC)
  -ON MODE = SET FOR AUTO ON CONTROL (PUBLIC SPACES, i.e. RESTROOMS, PRIMARY ENTRANCE, LOBBY, CORRIDORS, STAIR CASES, ETC. PER IECC)

5 E-2 TYPICAL 1-POLE WALL SWITCH / OCCUPANY SENSOR

SCALE: N.T.S. Electrical Detail

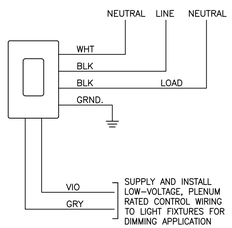

GENERAL NOTES:

a. DETAIL SHOWN FOR REFERENCE ONLY. INSTALL AND WIRE PER MANUFACTURE INSTRUCTIONS.
b. PROGRAMMING FUNCTIONS SHALL REMAIN AT DEFAULT SETTING EXCEPT FOR AS FOLLOWS:
  -OCCUPANCY TIME DELAY = 15 MINUTES
  -ON MODE = SET FOR MANUAL ON CONTROL
  -ACTIVATE DAYLIGHT HARVESTING CONTROLS FOR ROOMS / AREAS WITH EXTERIOR WINDOWS.

6 E-2 TYPICAL 0-10V DIMMING SWITCH

SCALE: N.T.S. Electrical Detail

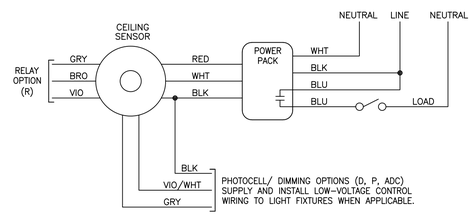

GENERAL NOTES:

a. DETAIL SHOWN FOR REFERENCE ONLY. INSTALL AND WIRE PER MANUFACTURE INSTRUCTIONS.
b. PROGRAMMING FUNCTIONS SHALL REMAIN AT DEFAULT SETTING EXCEPT FOR AS FOLLOWS:
  -OCCUPANCY TIME DELAY = 20 MINUTES
  -PHOTOCELL MODE = DIM ONLY, NO OFF
  -DIMMING RANGE = 10V HIGH, 3V LOW

7 E-2 TYPICAL LOW-VOLTAGE CEILING MOUNT OCCUPANY SENSOR

SCALE: N.T.S. Electrical Detail

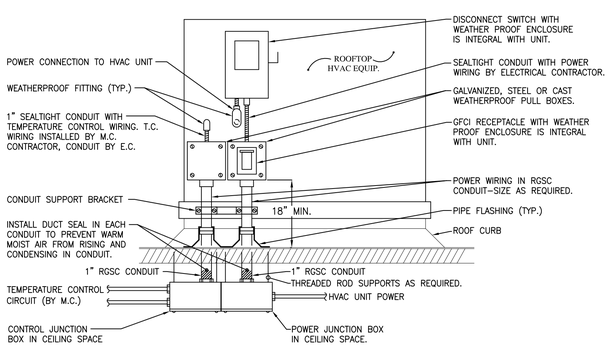

GENERAL NOTES:

a. WIRING TO THE ROOFTOP HVAC EQUIPMENT SHALL EXTEND THROUGH THE ROOF IN CONDUITS LOCATED OUTSIDE OF THE EQUIPMENT ROOF CURB AS SHOWN, UNLESS OTHERWISE SPECIFICALLY ALLOWED BY THE UNIT MANUFACTURER.
b. WIRE RUN INSIDE HVAC EQUIPMENT SHALL BE ACCOMPLISHED IN A MANNER ACCEPTABLE WITH THE UNIT MANUFACTURER AND SHALL MEET ALL REQUIREMENTS OF THE NATIONAL ELECTRIC CODE.
c. COORDINATE CONTROL WIRING RACEWAY INSTALLATION WITH THE MECHANICAL CONTRACTOR. TEMPERATURE CONTROL WIRING BY MECHANICAL CONTRACTOR.

8 E-2 TYPICAL ROOFTOP HVAC UNIT

SCALE: N.T.S. Electrical Detail

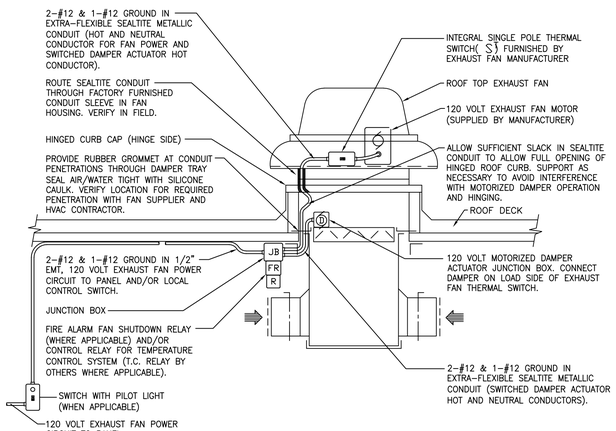

9 E-2 TYPICAL 120V ROOFTOP EXHAUST FAN

SCALE: N.T.S. Electrical Detail

NOTICE

This document, the property of, prepared and issued by the architect, is submitted for the specific project namely _____ and the recipient by accepting this document assumes custody and agrees that this document will not be copied or reproduced in part or in whole, and any special features peculiar to this design shall not be incorporated in any other project, unless prior agreement has been obtained in writing.These documents will be returned immediately upon completion of the project or upon the request of the architect.
This document is the exclusive property of the architect, no rights to ownership are transferable, or shall be lost by the filing of this document with any and all public authorities for the purpose of compliance with Codes and or Ordinances, i.e. Building Permit, etc.

EBS ENGINEERING, PC
ENGINEERED BUILDING SYSTEMS
MECHANICAL · ELECTRICAL ENGINEERS
2568 WALDEN AVENUE
SUITE 107
CHEEKTOWAGA, NEW YORK 14225
PHONE: (716) 836-9600
FAX: (716) 836-9636
EMAIL: MAIL@EBSPE.COM
WEBSITE: WWW.EBSPE.COM

COPYRIGHT © 2021 ENGINEERED BUILDING SYSTEMS

Bryant & Stratton
1259 Central Ave.
Albany, NY 12205

ISSUE:
2021-06-29: BID/PERMIT SET

SA PROJECT TEAM: PRINCIPAL P.Silvestri
PROJ. ARCH. S.Hunt DRAFTER
JOB CAPT. INTERIORS N.Catuzza

SEAL:

TITLE:
ELECTRICAL DETAILS

SILVESTRI ARCHITECTS · PC
1321 MILLERSPORT HWY PH. 716.691.0900
AMHERST, NY 14221 FAX 716.691.4773

SA JOB #: 14082.07
DATE: 6-29-2021

DRAWING #: E-2

GENERAL DRAWING NOTES:

a. POWER CIRCUIT WIRING SHALL BE PROVIDED TO DEVICES SHOWN, UNLESS OTHERWISE INDICATED. MINIMUM WIRE SIZE SHALL BE #12 AWG., UNLESS OTHERWISE INDICATED OR REQUIRED AS A RESULT OF HOMERUN LENGTH AS DETERMINED BY THE E.C. DERATING AND CONDUIT FILL SHALL BE AS REQUIRED BY THE NEC.

b. ELECTRICAL DEVICES WITH "RE" DESIGNATIONS SHALL BE REPLACED IN-KIND WITH NEW. EXISTING BRANCH CIRCUIT WIRING SERVING THESE DEVICES SHALL BE RETAINED AND REUSED.

c. ALL NEW STANDARD AND GFI RECEPTACLES TO BE TAMPER-PROOF.

d. UNLESS OTHERWISE INDICATED, CIRCUIT NEW DEVICES FROM SPARE 1-POLE, 20A CIRCUIT BREAKERS IN EXISTING 208Y/120V PANEL 'D'. EACH CIRCUIT IS IDENTIFIED BY A CAPITAL LETTER (IE: A, B, C, ETC.). SEE INDIVIDUAL SYMBOLS ON THE DRAWING FOR CAPITAL LETTER DESIGNATIONS. FIELD VERIFY SPARE CIRCUIT BREAKER AVAILABILITY IN POWER PANEL.

e. DEVICES WITH 'OC' DESIGNATIONS SHALL BE INSTALLED ABOVE COUNTER TOP +42" A.F.F. COORDINATE INSTALLATION HEIGHT WITH G.C. AND ARCHITECTURAL MILLWORK/ELEVATION PLANS PRIOR TO ELECTRICAL ROUGH-IN.

f. PROVIDE PRINTED LABELS FOR APPLICATION TO DEVICE COVERPLATES IDENTIFYING THE FOLLOWING:
   1. RECEPTACLE WALL PLATES = PANEL AND CIRCUIT DESIGNATIONS.

DRAWING KEYNOTES: (X)

1. EXISTING 3ø, 208Y/120V POWER PANEL SCHEDULED TO REMAIN.
2. EXISTING RECEPTACLE CIRCUIT SERVING THIS ROOM SHALL BE RETAINED AND REUSED TO SERVE NEW RECEPTACLES SHOWN.

CIRCUIT BREAKER CHART
EXISTING 208Y/120V PANEL 'D':

CKT.	C.B.	DESCRIPTION
'A'	1P/20A	STUDENT LOUNGE 129 RECEPTACLES

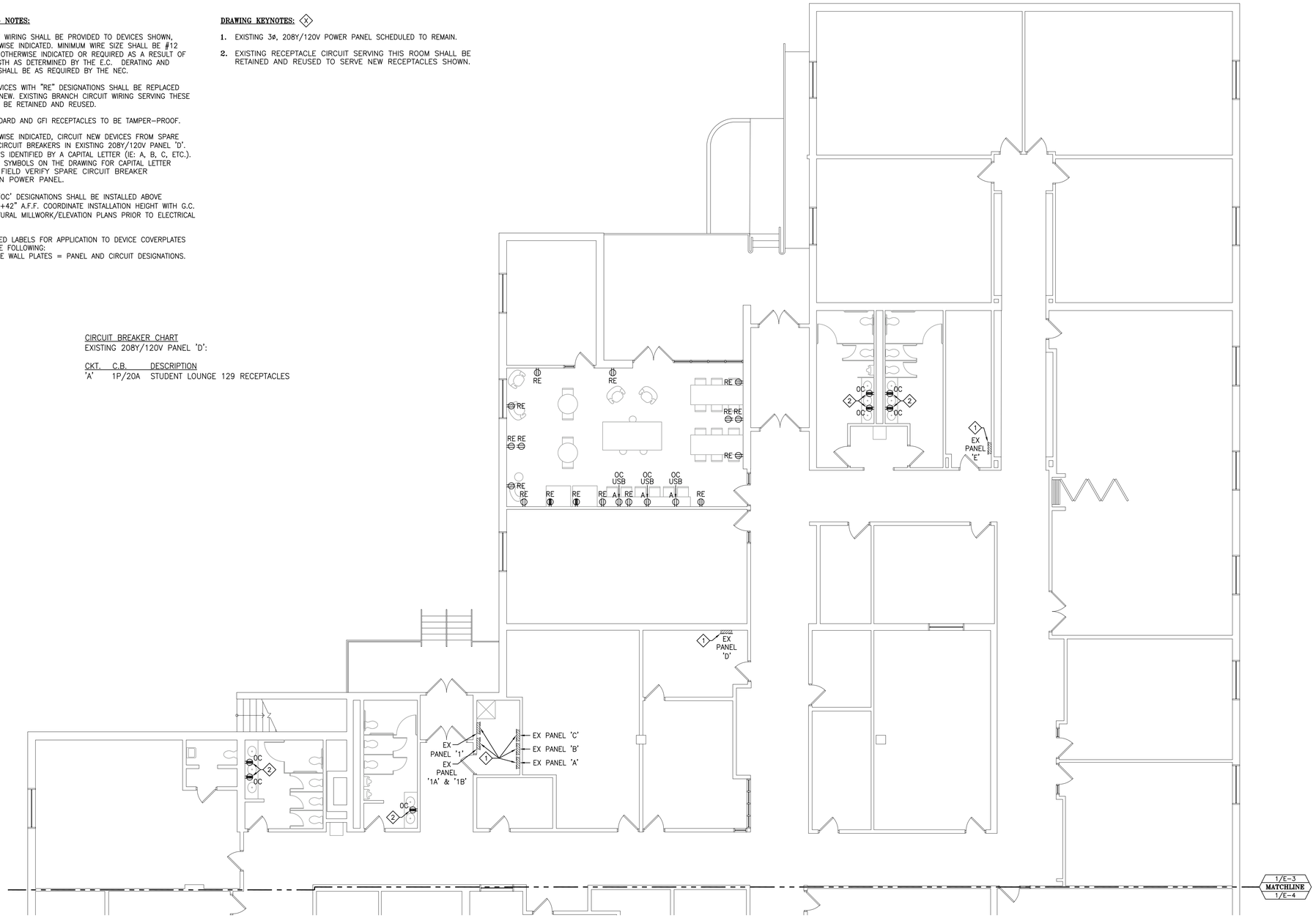

1 / E-3 ELECTRICAL POWER - PARTIAL FLOOR PLAN
SCALE: 1/8"" = 1'-0"

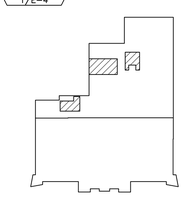

= AREA OF WORK WHERE NEW CONSTRUCTION IS BEING PERFORMED

KEYPLAN

NOTICE

This document, the property of, prepared and issued by the architect, is submitted for the specific project namely _____ and the recipient by accepting this document assumes custody and agrees that this document will not be copied or reproduced in part or in whole, and any special features peculiar to this design shall not be incorporated in any other project, unless prior agreement has been obtained in writing.These documents will be returned immediately upon completion of the project or upon the request of the architect.
This document is the exclusive property of the architect, no rights to ownership are transferable, or shall be lost by the filing of this document with any and all public authorities for the purpose of compliance with Codes and or Ordinances, i.e. Building Permit, etc.

EBS ENGINEERING, PC
ENGINEERED BUILDING SYSTEMS
MECHANICAL · ELECTRICAL ENGINEERS
2568 WALDEN AVENUE
SUITE 107
CHEEKTOWAGA, NEW YORK 14225
PHONE: (716) 836-9600
FAX: (716) 836-9636
EMAIL: MAIL@EBSPE.COM
WEBSITE: WWW.EBSPE.COM

COPYRIGHT © 2021 ENGINEERED BUILDING SYSTEMS

Bryant & Stratton

1259 Central Ave.
Albany, NY 12205

ISSUE:
2021-06-29: BID/PERMIT SET

SA PROJECT TEAM: PRINCIPAL P.Silvestri
PROJ. ARCH. S.Hunt DRAFTER
JOB CAPT. INTERIORS N.Catuzza

SEAL:

TITLE:
ELECTRICAL POWER PARTIAL FLOOR PLAN

SILVESTRI ARCHITECTS · PC
1321 MILLERSPORT HWY PH. 716.691.0900
AMHERST, NY 14221 FAX 716.691.4773

SA JOB #: 14082.07
DATE: 6-29-2021

DRAWING #: E-3

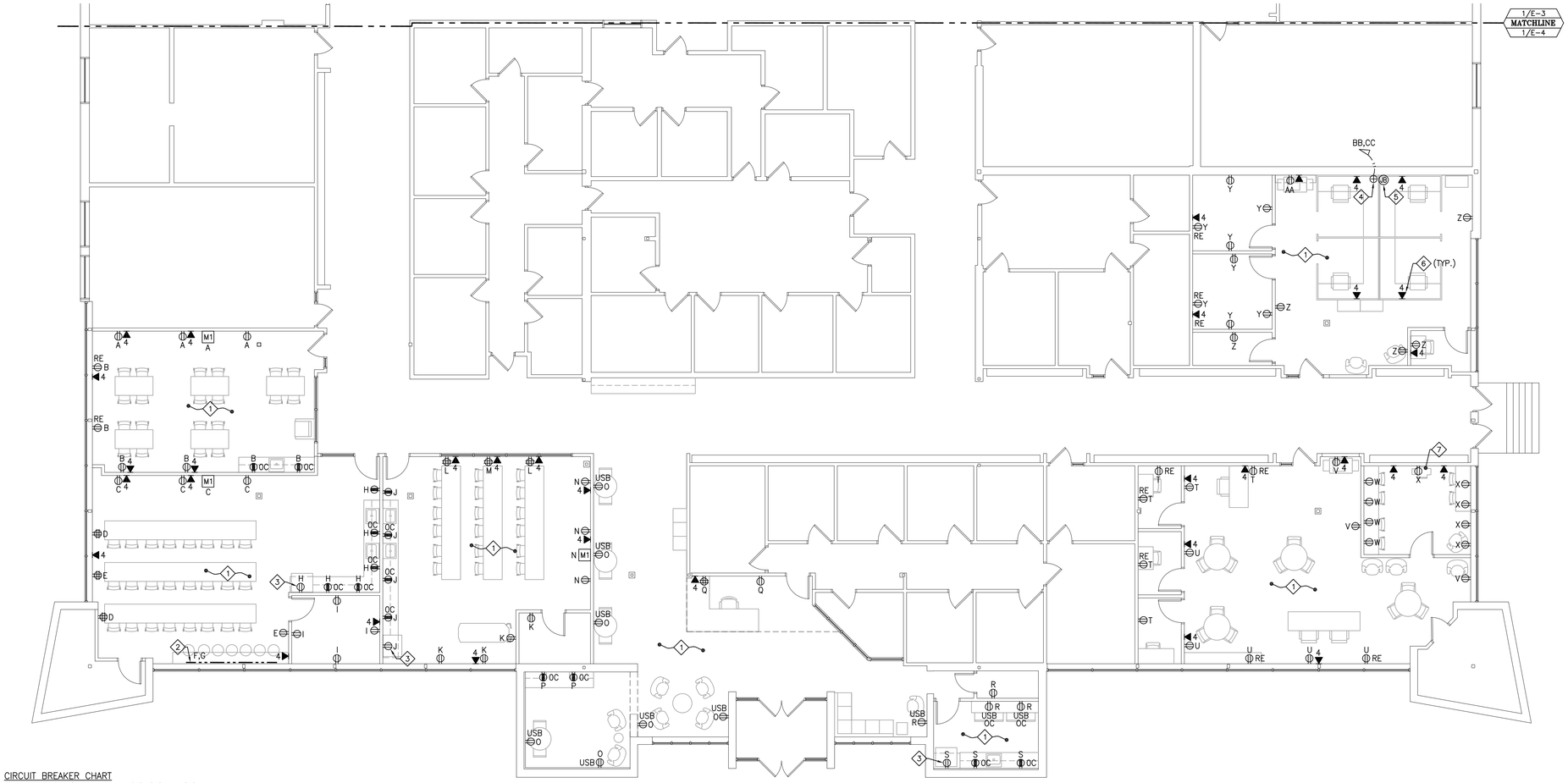

CIRCUIT BREAKER CHART
EXISTING 208Y/120V PANEL 'A', 'B' OR 'C':

CKT.	C.B.	DESCRIPTION
'A'	1P/20A	CLASSROOM 130 RECEPTACLES
'B'	1P/20A	CLASSROOM 130 RECEPTACLES
'C'	1P/20A	LAB 117 RECEPTACLES
'D'	1P/20A	LAB 117 RECEPTACLES
'E'	1P/20A	LAB 117 RECEPTACLES
'F'	1P/20A	LAB 117 PLUGMOLD RECEPTACLES
'G'	1P/20A	LAB 117 PLUGMOLD RECEPTACLES
'H'	1P/20A	LAB 117 COUNTER RECEPTACLES
'I'	1P/20A	MA PD 118 RECEPTACLES
'J'	1P/20A	LAB 115 COUNTER RECEPTACLES
'K'	1P/20A	LAB 115, STOR. 116 RECEPTACLES
'L'	1P/20A	LAB 115 RECEPTACLES
'M'	1P/20A	LAB 115 RECEPTACLES
'N'	1P/20A	LAB 115 RECEPTACLES
'O'	1P/20A	RECEPTION 102, WAITING 103 RECEPTACLES
'P'	1P/20A	WAITING 103 COUNTER RECEPTACLES
'Q'	1P/20A	RECEPTION 102 RECEPTACLES
'Q'	1P/20A	WAITING 104, STOR. 106, EMPLOYEE COFFEE AREA 105 RECEPTACLES
'S'	1P/20A	EMPLOYEE COFFEE AREA 105 RECEPTACLES
'T'	1P/20A	LEARNING CENTER 166, TESTING 167, 168, 169 RECEPTACLES
'U'	1P/20A	LEARNING CENTER 166 RECEPTACLES
'V'	1P/20A	LEARNING CENTER 166 RECEPTACLES
'W'	1P/20A	LEARNING CENTER 170 RECEPTACLES
'X'	1P/20A	LEARNING CENTER 170 RECEPTACLES
'Y'	1P/20A	OFFICE 160, 161 RECEPTACLES
'Z'	1P/20A	PFC LOBBY 156, STOR. 164, TESTING 165 RECEPTACLES
'AA'	1P/20A	PFC LOBBY 156 RECEPTACLE
'BB'	1P/20A	PFC LOBBY 156 CUBICLE RECEPTACLES
'CC'	1P/20A	PFC LOBBY 156 CUBICLE RECEPTACLES

1 / E-4 ELECTRICAL POWER - PARTIAL FLOOR PLAN

SCALE: 1/8"" = 1'-0"

GENERAL DRAWING NOTES:

a. POWER CIRCUIT WIRING SHALL BE PROVIDED TO DEVICES SHOWN, UNLESS OTHERWISE INDICATED. MINIMUM WIRE SIZE SHALL BE #12 AWG., UNLESS OTHERWISE INDICATED OR REQUIRED AS A RESULT OF HOMERUN LENGTH AS DETERMINED BY THE E.C. DERATING AND CONDUIT FILL SHALL BE AS REQUIRED BY THE NEC.

b. EXISTING RECEPTACLES & PLUG MOLD STRIPS NOT REPRESENTED ON DRAWINGS THAT ARE FOUND IN AREAS OF WORK SHALL BE DISCONNECTED AND REMOVED UNLESS OTHERWISE DIRECTED BY G.C. ASSOCIATED WIRING SHALL BE RETAINED FOR REUSE TO SERVE NEW DEVICES SHOWN AS DETERMINED BY E.C.

c. ELECTRICAL DEVICES WITH "RE" DESIGNATIONS SHALL BE REPLACED IN-KIND WITH NEW. EXISTING BRANCH CIRCUIT WIRING SERVING THESE DEVICES SHALL BE RETAINED AND REUSED UNLESS OTHERWISE INDICATED.

d. ALL NEW STANDARD AND GFI RECEPTACLES TO BE TAMPER-PROOF.

e. UNLESS OTHERWISE INDICATED, CIRCUIT NEW DEVICES FROM SPARE 1-POLE, 20A CIRCUIT BREAKERS IN EXISTING 208Y/120V PANEL 'A', 'B' OR 'C'. EACH CIRCUIT IS IDENTIFIED BY A CAPITAL LETTER (IE: A, B, C, ETC.). SEE INDIVIDUAL SYMBOLS ON THE DRAWING FOR CAPITAL LETTER DESIGNATIONS. FIELD VERIFY SPARE CIRCUIT BREAKER AVAILABILITY IN POWER PANELS.

f. DEVICES WITH 'OC' DESIGNATIONS SHALL BE INSTALLED ABOVE COUNTER TOP +42" A.F.F. COORDINATE INSTALLATION HEIGHT WITH G.C. AND ARCHITECTURAL MILLWORK/ELEVATION PLANS PRIOR TO ELECTRICAL ROUGH-IN.

g. NETWORK CABLING SERVING NEW COMMUNICATION WALLPLATES SHALL EMANATE FROM EXISTING PATCH PANEL(S) LOCATED IN EXISTING I.T. CLOSET (IDF). E.C. MUST FIELD VERIFY EXISTING EQUIPMENT IN I.T. CLOSET (IDF) WITH OWNER I.T. PERSONAL, PRIOR TO ANY WORK, TO GAIN A FULL UNDERSTANDING OF EXISTING SYSTEMS AND OVERALL INSTALLATION REQUIREMENTS NECESSARY TO COMPLETE NEW WORK.

h. PROVIDE PRINTED LABELS FOR APPLICATION TO DEVICE COVERPLATES IDENTIFYING THE FOLLOWING:
   1. RECEPTACLE WALL PLATES = PANEL AND CIRCUIT DESIGNATIONS.
   2. COMMUNICATIONS WALL PLATES = CORRESPONDING PATCH PANEL PORT FOR EACH CAT. 6 CABLE DROP.

DRAWING KEYNOTES: (X)

1. EXISTING 120V RECEPTACLE CIRCUITS EMANATING FROM PANEL 'A', 'B', OR 'C' SERVING AREAS WHERE THIS KEYNOTE IS SHOWN MAY BE REUSED TO FEED NEW DEVICES SHOWN AS DETERMINED BY E.C. IN THE FIELD.
2. PROVIDE 12' LENGTH OF PLUGMOLD FOR INSTALLATION TO UNDERSIDE OF COUNTERTOP. REFERENCE ARCHITECTURAL DETAILS FOR FURTHER INFORMATION. PLUGMOLD SHALL HAVE SINGLE TAMPER-RESISTANT RECEPTACLES INSTALLED ON 12" CENTERS CAPABLE OF BEING WIRED WITH TWO(2) 120V CIRCUITS.UTILIZE WIREMOLD; PLUGMOLD 2000 SERIES OR EQUAL.
3. WIRE FROM GFCI PROTECTED SIDE OF COUNTER RECEPTACLE FED BY SAME CIRCUIT DESIGNATION.
4. FEED PRE-WIRED CUBICLE GROUP WITH DESIGNATED 120V POWER CIRCUITS. UP TO EIGHT(8) RECEPTACLES MAY BE FED BY A SINGLE 20A C.B. INSTALL 2-GANG ELECTRICAL BOX FLUSH TO FINISHED WALL 12" A.F.F. WITH NECESSARY FURNITURE FEED COVERPLATE TO ALLOW FOR POWER TERMINATIONS TO PRE-WIRED CUBICLE GROUP POWER WHIP. CONFIRM POWER TERMINATION REQUIREMENTS WITH G.C. AND FURNITURE SYSTEM PROVIDER PRIOR TO ANY WORK.
5. INSTALL 2-GANG ELECTRICAL BOX, WITH PASS-THRU COVERPLATE, FLUSH TO FINISHED WALL 12" A.F.F. SUPPLY 1½" EMT CONDUIT AND INSTALL FROM ELECTRICAL BOX TO ACCESSIBLE CEILING SPACE WITH PLASTIC END-BUSHING AND A PULLSTRING. ELECTRIC BOX AND CONDUIT SHALL BE UTILIZED TO SERVE CUBICLE GROUP WITH NECESSARY TELEPHONE/DATA CABLES.
6. INSTALL NETWORK DATA JACK IN BASE OF FURNITURE PARTITION WITH APPROPRIATE COVERPLATE.
7. EXISTING TELEVISION OUTLET AND ASSOCIATED RECEPTACLE ARE SCHEDULED TO REMAIN.

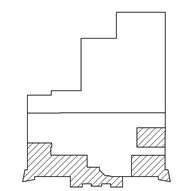

= AREA OF WORK WHERE NEW CONSTRUCTION IS BEING PERFORMED

KEYPLAN

NOTICE

This document, the property of, prepared and issued by the architect, is submitted for the specific project namely _____ and the recipient by accepting this document assumes custody and agrees that this document will not be copied or reproduced in part or in whole, and any special features peculiar to this design shall not be incorporated in any other project, unless prior agreement has been obtained in writing.These documents will be returned immediately upon completion of the project or upon the request of the architect.
This document is the exclusive property of the architect, no rights to ownership are transferable, or shall be lost by the filing of this document with any and all public authorities for the purpose of compliance with Codes and or Ordinances, i.e. Building Permit, etc.

EBS ENGINEERING, PC
ENGINEERED BUILDING SYSTEMS
MECHANICAL / ELECTRICAL ENGINEERS
2568 WALDEN AVENUE
SUITE 107
CHEEKTOWAGA, NEW YORK 14225
PHONE: (716) 836-9600
FAX: (716) 836-9636
EMAIL: MAIL@EBSPE.COM
WEBSITE: WWW.EBSPE.COM

COPYRIGHT © 2021 ENGINEERED BUILDING SYSTEMS

Bryant & Stratton

1259 Central Ave.
Albany, NY 12205

ISSUE:
2021-06-29: BID/PERMIT SET

SA PROJECT TEAM:
PROJ. ARCH. S.Hunt
JOB CAPT. _____
PRINCIPAL P.Silvestri
DRAFTER _____
INTERIORS N.Catuzza

SEAL:

TITLE:
ELECTRICAL POWER PARTIAL FLOOR PLAN

SILVESTRI ARCHITECTS · PC
1321 MILLERSPORT HWY PH. 716.691.0900
AMHERST, NY 14221 FAX 716.691.4773

SA JOB #: 14082.07
DATE: 6-29-2021
DRAWING #: E-4

HVAC EQUIPMENT SCHEDULE

UNIT #	DESCRIPTION	PHASE	VOLTAGE	MCA	EXISTING PANEL/CKT	CIRCUIT BREAKER	POWER WIRING & CONDUIT	DISCONNECT SWITCH	NOTES
RTU–1	HVAC ROOF TOP UNIT	3	208	41	FIELD VERIFY	50A–3P	3#8, 1#10G IN ¾"C	IDS	1,2
RTU–2	HVAC ROOF TOP UNIT	3	208	41	FIELD VERIFY	50A–3P	3#8, 1#10G IN ¾"C	IDS	1,2
RTU–3	HVAC ROOF TOP UNIT	3	208	53	FIELD VERIFY	60A–3P	3#6, 1#8G IN 1"C	IDS	1,2
RTU–4	HVAC ROOF TOP UNIT	3	208	31	FIELD VERIFY	45A–3P	3#8, 1#10G IN ¾"C	IDS	1,2
RTU–5	HVAC ROOF TOP UNIT	3	208	41	FIELD VERIFY	50A–3P	3#8, 1#10G IN ¾"C	IDS	1,2
RTU–6	HVAC ROOF TOP UNIT	3	208	21	FIELD VERIFY	30A–3P	3#10, 1#10G IN ¾"C	IDS	1,2
RTU–7	HVAC ROOF TOP UNIT	3	208	26	FIELD VERIFY	30A–3P	3#10, 1#10G IN ¾"C	IDS	1,2
RTU–8	HVAC ROOF TOP UNIT	3	208	60	FIELD VERIFY	70A–3P	3#4, 1#8G IN 1¼"C	IDS	1,2
RTU–9	HVAC ROOF TOP UNIT	3	208	31	FIELD VERIFY	45A–3P	3#8, 1#10G IN ¾"C	IDS	1,2
RTU–10	HVAC ROOF TOP UNIT	3	208	31	FIELD VERIFY	45A–3P	3#8, 1#10G IN ¾"C	IDS	1,2

EQUIPMENT SCHEDULE LEGEND

FSS = FUSIBLE SAFETY SWITCH, NUMBER INDICATES SWITCH SIZE. FUSES SHALL BE SIZED FOR EQUIPMENT MANUFACTURERS REQUIREMENTS. LOCATED AT UNIT.
SS = SAFETY SWITCH, NON–FUSED.
PCU = PACKAGED CONTROL UNIT, PROVIDE BY OTHERS.
TS = TOGGLE TYPE SWITCH (SINGLE GANG).
IDS = INTEGRAL DISCONNECT SWITCH.
TSP = TOGGLE SWITCH WITH PILOT LIGHT.
ST = TIMER SWITCH.

MOTOR CONTROLLER TYPES:

- TYPE A – (FULL VOLTAGE, NON–MAGNETIC, SINGLE PHASE): SURFACE MOUNT, TOGGLE SWITCH, STAINLESS STEEL WALLPLATE.
- TYPE A1 – (FULL VOLTAGE, NON–MAGNETIC SINGLE PHASE): SIMILAR TO TYPE A ABOVE EXCEPT WITH RED PILOT LIGHT.

EQUIPMENT SCHEDULED NOTES:

1. FIELD VERIFY EXISTING BRANCH CIRCUIT SERVING EXISTING UNIT IS SIZE ADEQUATELY TO MEET POWER REQUIREMENTS FOR REPLACEMENT UNIT AS SCHEDULED. IF EXISTING BRANCH CIRCUIT DOES NOT MEET WIRING REQUIREMENTS IDENTIFIED IN EQUIPMENT SCHEDULE, THAN THE E.C. SHALL SUPPLY AND INSTALL NEW CIRCUIT BREAKER, WIRING, CONDUIT ETC. AS SCHEDULED TO MEET NEW EQUIPMENT POWER REQUIREMENTS. FIELD VERIFY ALL NECESSARY ELECTRICAL WORK WITH G.C. AND M.C. REQUIRED TO SUPPORT UNIT REPLACEMENT.
2. NEW ROOF TOP UNIT WILL BE EQUIPPED WITH AN INTEGRAL PRE–WIRE GFCI RECEPTACLE.

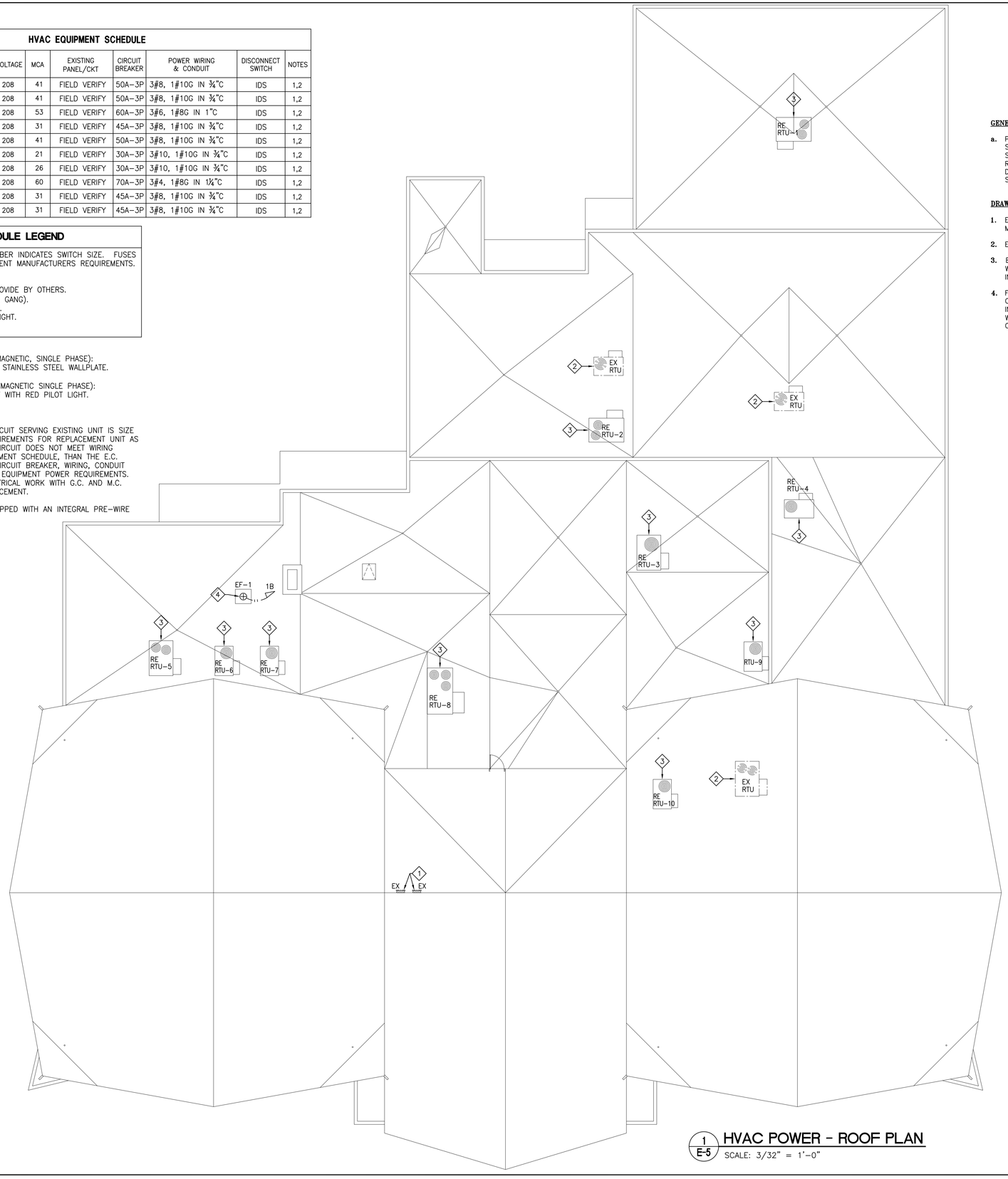

1 / E-5 HVAC POWER – ROOF PLAN
SCALE: 3/32" = 1'–0"

GENERAL NOTES:

a. POWER CIRCUIT WIRING SHALL BE PROVIDED TO DEVICES SHOWN, UNLESS OTHERWISE INDICATED. MINIMUM WIRE SIZE SHALL BE #12 AWG., UNLESS OTHERWISE INDICATED OR REQUIRED AS A RESULT OF HOMERUN LENGTH AS DETERMINED BY THE E.C. DERATING AND CONDUIT FILL SHALL BE AS REQUIRED BY THE NEC.

DRAWING KEYNOTES: (X)

1. EXISTING 3ø, 208Y/120V POWER PANEL LOCATED IN ROOF MECHANICAL ROOM SCHEDULED TO REMAIN.
2. EXISTING ROOF TOP UNIT SCHEDULED TO REMAIN.
3. EXISTING ROOF TOP UNIT SCHEDULED TO BE REPLACED WITH NEW. SEE 'HVAC EQUIPMENT SCHEDULE' FOR FURTHER INFORMATION.
4. FEED ROOF EXHAUST FAN WITH A 1ø, 120V POWER CONNECTION EMANATING FROM A SPARE 1–POLE, 20A C.B. IN EXISTING PANEL '1B'. EXHAUST FAN SHALL BE EQUIPPED WITH AN INTEGRAL PLUG TYPE DISCONNECT SWITCH. COORDINATE INSTALLATION WITH M.C.

NOTICE

This document, the property of, prepared and issued by the architect, is submitted for the specific project namely _____ and the recipient by accepting this document assumes custody and agrees that this document will not be copied or reproduced in part or in whole, and any special features peculiar to this design shall not be incorporated in any other project, unless prior agrement has been obtained in writing.These documents will be returned immediately upon completion of the project or upon the request of the architect.
This document is the exclusive property of the architect, no rights to ownership are transferable, or shall be lost by the filing of this document with any and all public authorities for the purpose of compliance with Codes and or Ordinances, i.e. Building Permit, etc.

EBS ENGINEERING, PC
ENGINEERED BUILDING SYSTEMS
MECHANICAL · ELECTRICAL·ENGINEERS
2568 WALDEN AVENUE
SUITE 107
CHEEKTOWAGA, NEW YORK 14225
PHONE: (716) 836-9600
FAX: (716) 836-9636
EMAIL: MAIL@EBSPE.COM
WEBSITE: WWW.EBSPE.COM

COPYRIGHT © 2021 ENGINEERED BUILDING SYSTEMS

Bryant & Stratton
1259 Central Ave.
Albany, NY 12205

ISSUE:
2021-06-29: BID/PERMIT SET

SA PROJECT TEAM: PRINCIPAL P.Silvestri
PROJ. ARCH. S.Hunt DRAFTER
JOB CAPT. INTERIORS N.Catuzza

SEAL:

TITLE:
HVAC POWER ROOF PLAN

SILVESTRI ARCHITECTS · PC
1321 MILLERSPORT HWY PH. 716.691.0900
AMHERST, NY 14221 FAX 716.691.4773

SA JOB #: 14082.07
DATE: 6-29-2021
DRAWING #: E-5

GENERAL DRAWING NOTES:

a. LIGHTING DEVICES WITH "RE" DESIGNATIONS SHALL BE REPLACED IN-KIND WITH NEW. EXISTING BRANCH CIRCUIT WIRING SERVING THESE DEVICES SHALL BE RETAINED AND REUSED.

b. TOGGLE SWITCH, OCCUPANCY SENSOR/SWITCH, CEILING OCCUPANCY SENSOR ETC. SHALL BE WIRED TO CONTROL LIGHT FIXTURES LOCATED WITHIN ASSOCIATED ROOM. IN CASES WHERE SWITCHING SCHEME IS NOT OBVIOUS, LOWERCASE LETTERS (IE: "a", "b", "c" ETC.) WILL BE SHOWN TO IDENTIFY SWITCHING SCHEME.

c. NEW EMERGENCY LIGHTS AND EXIT SIGNS SHALL BE WIRED WITH A CONSTANT 120V POWER CONNECTION FROM LOCAL AREA LIGHTING CIRCUIT BYPASSING ALL LIGHTING CONTROLS. FIELD VERIFY EXISTING 120V LIGHT CIRCUITING AND TRACE AS NEEDED.

DRAWING KEYNOTES: (X)

1. WIRE NEW LIGHT FIXTURE(S) FROM EXISTING LOCAL AREA 120V LIGHTING CIRCUIT. FIELD VERIFY EXISTING 120V LIGHTING CIRCUIT AND TRACE AS NEEDED. SUPPLY AND INSTALL NEW LIGHTING CONTROLS AS INDICATED.

2. SEQUENCE OF OPERATION FOR ROOM LIGHTING CONTROL:
   a. PROGRAM WALL CONTROLLER FOR MANUAL ON.
   b. PROGRAM OCCUPANCY SENSOR(S) FOR VACANCY CONTROL AFTER 20 MIN. OF INACTIVITY.
   c. PROGRAM DAYLIGHT HARVESTING SENSORS FOR LIGHT REDUCTION CONTROL WHERE APPLICABLE.

3. INTEGRAL SENSOR SHALL BE PROGRAMMED TO PROVIDE VACANCY CONTROL FOR ALL LIGHT FIXTURES LOCATED WITHIN SAME ROOM.

4. FIELD VERIFY WHAT (3) EXISTING TOGGLE SWITCHES ARE CURRENTLY CONTROLLING. SWITCH(ES) CONTROLLING STUDENT LOUNGE SHALL BE REPLACED WITH A SINGLE ON/OFF/DIMMING CONTROLLER. REMAINING SWITCH(ES) SERVING OTHER AREAS SHALL BE REPLACE WITH NEW. IF IT IS DETERMINED THAT THERE ARE EXISTING SWITCHES THAT ARE NO LONGER REQUIRED, THAN THEY SHALL BE REMOVED IN THEIR ENTIRETY. PATCH AND REPAIR WALL AS NEEDED.

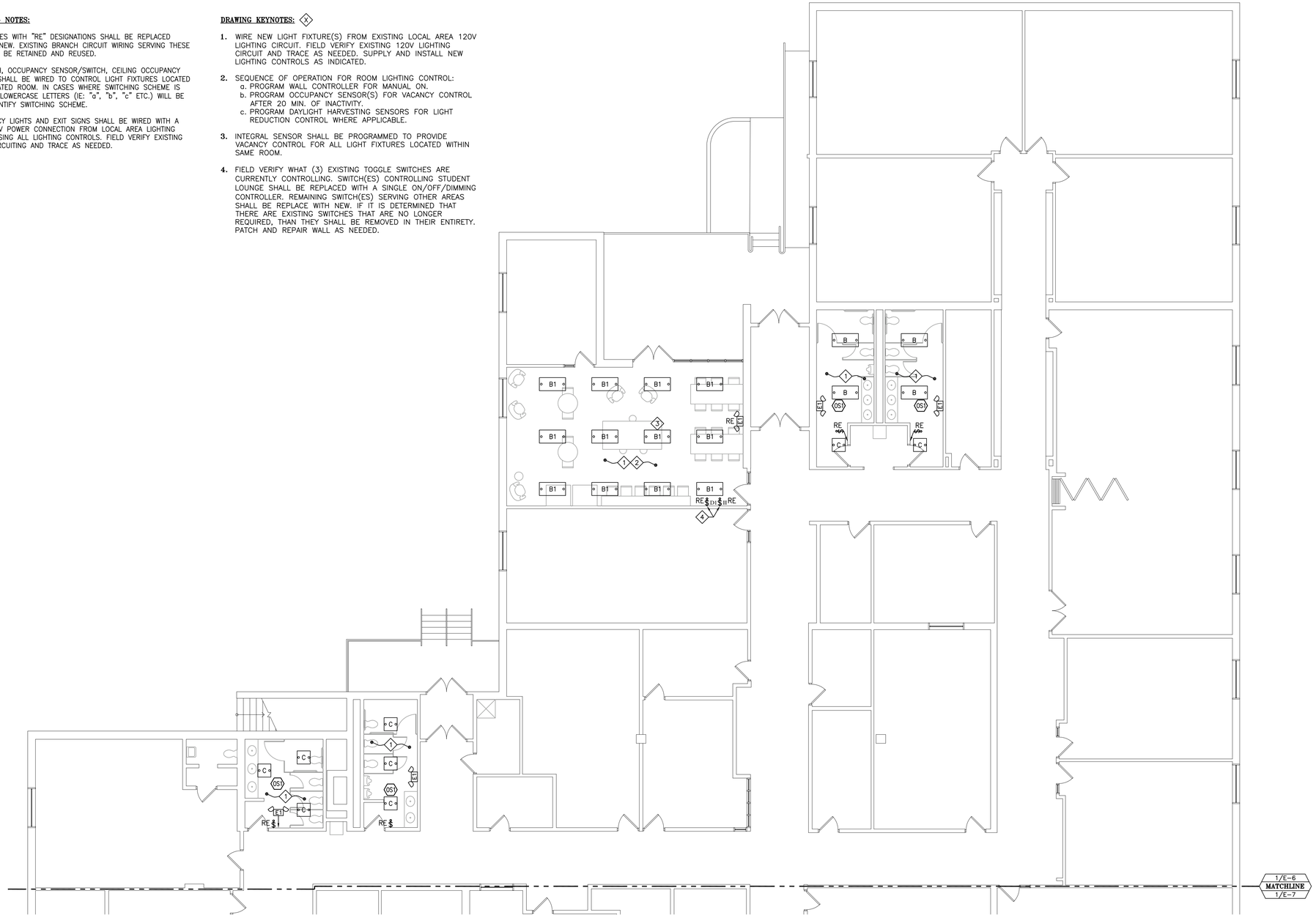

1 / E-6 ELECTRICAL LIGHTING - PARTIAL FLOOR PLAN
SCALE: 1/8"" = 1'-0"

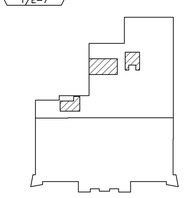

= AREA OF WORK WHERE NEW CONSTRUCTION IS BEING PERFORMED

KEYPLAN

NOTICE

This document, the property of, prepared and issued by the architect, is submitted for the specific project namely _____ and the recipient by accepting this document assumes custody and agrees that this document will not be copied or reproduced in part or in whole, and any special features peculiar to this design shall not be incorporated in any other project, unless prior agreement has been obtained in writing.These documents will be returned immediately upon completion of the project or upon the request of the architect.
This document is the exclusive property of the architect, no rights to ownership are transferable, or shall be lost by the filing of this document with any and all public authorities for the purpose of compliance with Codes and or Ordinances, i.e. Building Permit, etc.

EBS ENGINEERING, PC
ENGINEERED BUILDING SYSTEMS
MECHANICAL · ELECTRICAL·ENGINEERS
2568 WALDEN AVENUE
SUITE 107
CHEEKTOWAGA, NEW YORK 14225
PHONE: (716) 836-9600
FAX: (716) 836-9636
EMAIL: MAIL@EBSPE.COM
WEBSITE: WWW.EBSPE.COM

COPYRIGHT © 2021 ENGINEERED BUILDING SYSTEMS

Bryant & Stratton

1259 Central Ave.
Albany, NY 12205

ISSUE:
2021-06-29: BID/PERMIT SET

SA PROJECT TEAM: PRINCIPAL P.Silvestri
PROJ. ARCH. S.Hunt DRAFTER
JOB CAPT. INTERIORS N.Catuzza

SEAL:

TITLE:
ELECTRICAL LIGHTING PARTIAL FLOOR PLAN

SILVESTRI ARCHITECTS · PC
1321 MILLERSPORT HWY PH. 716.691.0900
AMHERST, NY 14221 FAX 716.691.4773

SA JOB #: 14082.07
DATE: 6-29-2021

DRAWING #: E-6

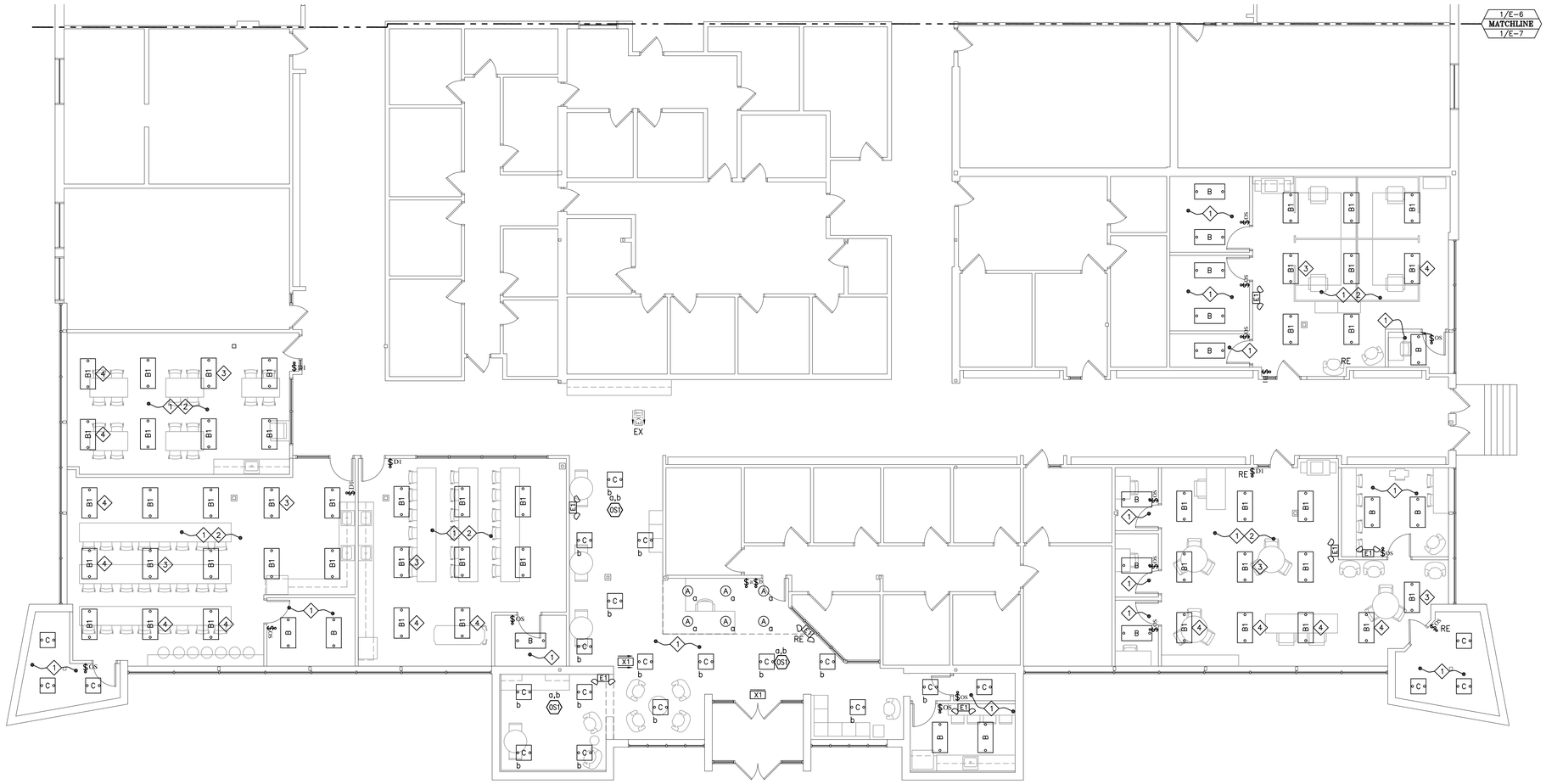

1/E-7 ELECTRICAL LIGHTING - PARTIAL FLOOR PLAN

SCALE: 1/8"" = 1'-0"

GENERAL DRAWING NOTES:

a. LIGHTING DEVICES WITH "RE" DESIGNATIONS SHALL BE REPLACED IN-KIND WITH NEW. EXISTING BRANCH CIRCUIT WIRING SERVING THESE DEVICES SHALL BE RETAINED AND REUSED.

b. TOGGLE SWITCH, OCCUPANCY SENSOR/SWITCH, CEILING OCCUPANCY SENSOR ETC. SHALL BE WIRED TO CONTROL LIGHT FIXTURES LOCATED WITHIN ASSOCIATED ROOM. IN CASES WHERE SWITCHING SCHEME IS NOT OBVIOUS, LOWERCASE LETTERS (IE: "a", "b", "c" ETC.) WILL BE SHOWN TO IDENTIFY SWITCHING SCHEME.

c. NEW EMERGENCY LIGHTS AND EXIT SIGNS SHALL BE WIRED WITH A CONSTANT 120V POWER CONNECTION FROM LOCAL AREA LIGHTING CIRCUIT BYPASSING ALL LIGHTING CONTROLS. FIELD VERIFY EXISTING 120V LIGHT CIRCUITING AND TRACE AS NEEDED.

DRAWING KEYNOTES: (X)

1. WIRE NEW LIGHT FIXTURE(S) FROM EXISTING LOCAL AREA 120V LIGHTING CIRCUIT. FIELD VERIFY EXISTING 120V LIGHTING CIRCUIT AND TRACE AS NEEDED. SUPPLY AND INSTALL NEW LIGHTING CONTROLS AS INDICATED.

2. SEQUENCE OF OPERATION FOR ROOM LIGHTING CONTROL:
   a. PROGRAM WALL CONTROLLER FOR MANUAL ON.
   b. PROGRAM OCCUPANCY SENSOR(S) FOR VACANCY CONTROL AFTER 20 MIN. OF INACTIVITY.
   c. PROGRAM DAYLIGHT HARVESTING SENSORS FOR LIGHT REDUCTION CONTROL WHERE APPLICABLE.

3. INTEGRAL SENSOR SHALL BE PROGRAMMED TO PROVIDE VACANCY CONTROL FOR ALL LIGHT FIXTURES LOCATED WITHIN SAME ROOM.

4. INTEGRAL SENSOR SHALL BE PROGRAMMED TO PROVIDE DAYLIGHT HARVESTING CONTROL FOR DESIGNATED FIXTURE IDENTIFIED BY THIS KEYNOTE.

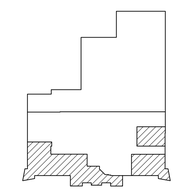

= AREA OF WORK WHERE NEW CONSTRUCTION IS BEING PERFORMED

KEYPLAN

NOTICE

This document, the property of, prepared and issued by the architect, is submitted for the specific project namely _____ and the recipient by accepting this document assumes custody and agrees that this document will not be copied or reproduced in part or in whole, and any special features peculiar to this design shall not be incorporated in any other project, unless prior agreement has been obtained in writing. These documents will be returned immediately upon completion of the project or upon the request of the architect.
This document is the exclusive property of the architect, no rights to ownership are transferable, or shall be lost by the filing of this document with any and all public authorities for the purpose of compliance with Codes and or Ordinances, i.e. Building Permit, etc.

EBS ENGINEERING, PC
ENGINEERED BUILDING SYSTEMS
MECHANICAL · ELECTRICAL ENGINEERS
2568 WALDEN AVENUE
SUITE 107
CHEEKTOWAGA, NEW YORK 14225
PHONE: (716) 836-9600
FAX: (716) 836-9636
EMAIL: MAIL@EBSPE.COM
WEBSITE: WWW.EBSPE.COM

COPYRIGHT © 2021 ENGINEERED BUILDING SYSTEMS

Bryant & Stratton

1259 Central Ave.
Albany, NY 12205

ISSUE:
2021-06-29: BID/PERMIT SET

SA PROJECT TEAM:
PROJ. ARCH. S.Hunt
JOB CAPT. _____
PRINCIPAL P.Silvestri
DRAFTER _____
INTERIORS N.Catuzza

SEAL:

TITLE:
ELECTRICAL LIGHTING PARTIAL FLOOR PLAN

SILVESTRI ARCHITECTS · PC
1321 MILLERSPORT HWY
AMHERST, NY 14221
PH. 716.691.0900
FAX 716.691.4773

SA JOB #: 14082.07

DATE: 6-29-2021

DRAWING #: E-7

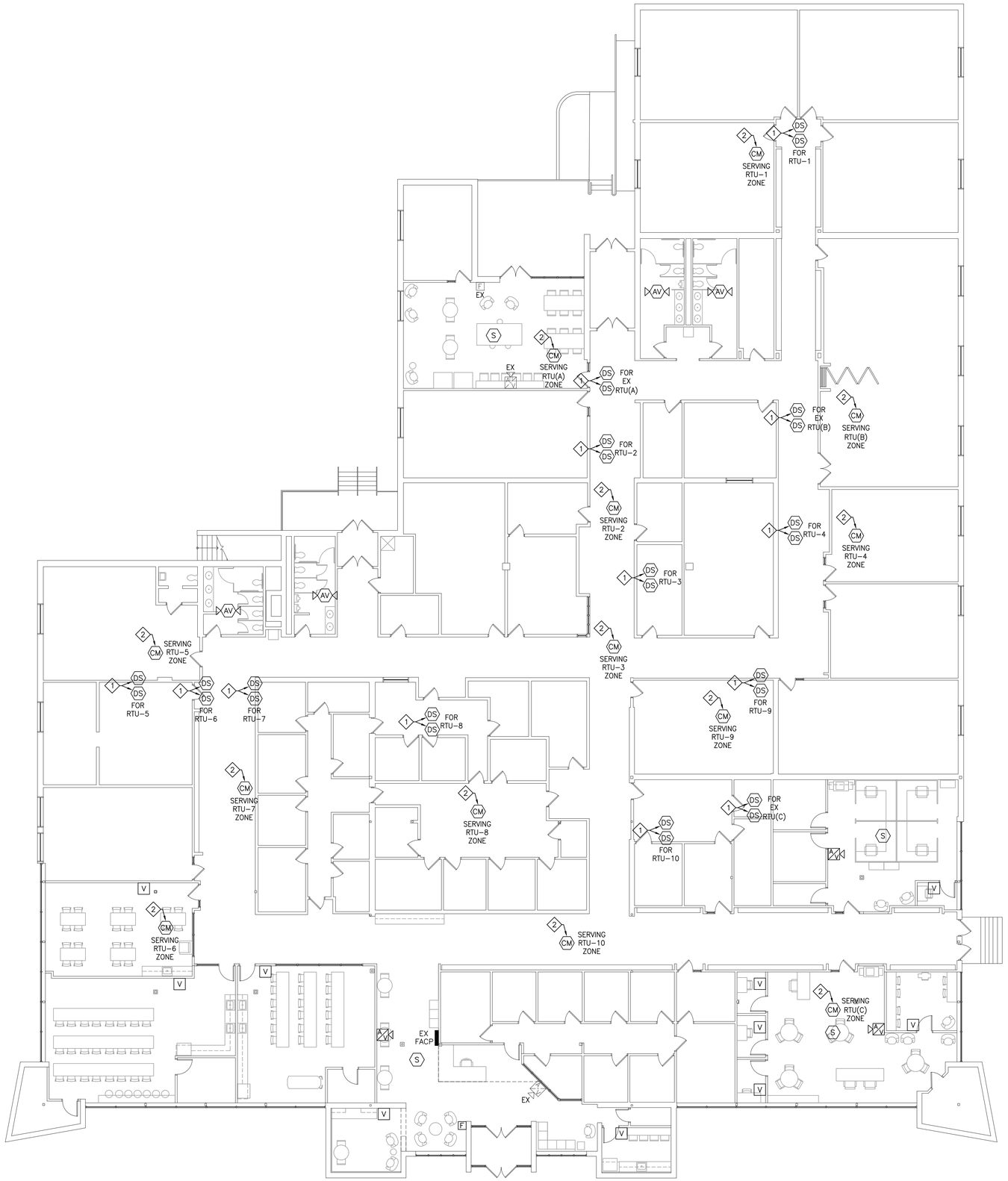

1 / E-8 FIRE ALARM - FLOOR PLAN

SCALE: 3/32" = 1'-0"

GENERAL NOTES:

a. ENSURE ALL SMOKE DETECTORS ARE PLACED A MINIMAL DISTANCE OF 3'-0" FROM HVAC SUPPLY / RETURN AIR GRILLS. LOCATIONS SHOWN ON PLANS ARE SUGGESTED.

b. ENSURE CARBON MONOXIDE DETECTORS ARE INSTALLED AT LOCATIONS MEETING CURRENT NYS AND LOCAL CODES.

c. FIRE ALARM VISUAL (STROBE) DEVICE CANDELA RATINGS SHALL BE SET AT 15cd UNLESS OTHERWISE NOTED.

LIGHTING KEYNOTES: (X)

1. SUPPLY DUCT SMOKE DETECTOR, WITH SAMPLING TUBE, AND INSTALL IN SUPPLY AND RETURN AIR DUCT OF ROOF TOP UNIT (RTU). FIELD VERIFY EXACT LOCATION WITH M.C. SUPPLY EACH WITH A REMOTE TEST STATION AND INSTALL IN NEAREST STORAGE OR MECHANICAL RM., TO BE FIELD VERIFIED BY E.C., AND LABEL ACCORDINGLY. ROOF TOP UNIT SHALL BE PROGRAMMED TO SHUTDOWN UPON ACTIVATION OF FIRE ALARM SYSTEM. SUPPLY ALL REQUIRED DEVICES, MATERIALS AND PROGRAMMING OF FACP TO OBTAIN A 100% COMPLETE INSTALLATION.

2. LOCATE CARBON MONOXIDE DETECTOR IN HVAC ZONE AS CLOSE TO FIRST SUPPLY AIR DIFFUSER AS POSSIBLE. LOCATION SHOWN IS FOR REFERENCE ONLY. FIELD VERIFY EACH HVAC ZONE IN COORDINATION WITH G.C. AND M.C. IN ORDER TO DETERMINE FINAL DEVICE PLACEMENT THAT BEST SERVES THAT ZONE.

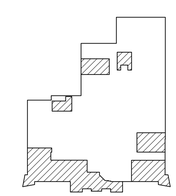

= AREA OF WORK WHERE NEW CONSTRUCTION IS BEING PERFORMED

KEYPLAN

NOTICE

This document, the property of, prepared and issued by the architect, is submitted for the specific project namely _____ and the recipient by accepting this document assumes custody and agrees that this document will not be copied or reproduced in part or in whole, and any special features peculiar to this design shall not be incorporated in any other project, unless prior agreement has been obtained in writing.These documents will be returned immediately upon completion of the project or upon the request of the architect.
This document is the exclusive property of the architect, no rights to ownership are transferable, or shall be lost by the filing of this document with any and all public authorities for the purpose of compliance with Codes and or Ordinances, i.e. Building Permit, etc.

EBS ENGINEERING, PC
ENGINEERED BUILDING SYSTEMS
MECHANICAL · ELECTRICAL·ENGINEERS
2568 WALDEN AVENUE
SUITE 107
CHEEKTOWAGA, NEW YORK 14225
PHONE: (716) 836-9600
FAX: (716) 836-9636
EMAIL: MAIL@EBSPE.COM
WEBSITE: WWW.EBSPE.COM

COPYRIGHT © 2021 ENGINEERED BUILDING SYSTEMS

Bryant & Stratton

1259 Central Ave.

Albany, NY 12205

ISSUE:
2021-06-29: BID/PERMIT SET

SA PROJECT TEAM: PRINCIPAL P.Silvestri
PROJ. ARCH. S.Hunt DRAFTER
JOB CAPT. INTERIORS N.Catuzza

SEAL:

TITLE:

FIRE ALARM FLOOR PLAN

SILVESTRI ARCHITECTS · PC
1321 MILLERSPORT HWY PH. 716.691.0900
AMHERST, NY 14221 FAX 716.691.4773

SA JOB #: 14082.07

DATE: 6-29-2021

DRAWING #: E-8

GENERAL PROVISIONS

A. GENERAL:

1. REQUIREMENTS SPECIFIED ON COVER SHEET, ALONG WITH ELECTRICAL SPECIFICATIONS AND ALL ITS SECTIONS, COMPRISE THE CONTRACT DOCUMENTS FOR THE ELECTRICAL CONTRACT. DRAWINGS AND ALL THEIR REVISIONS UP TO THE BID SUBMITTAL DATE BECOME A BINDING PART OF THE CONTRACT, ALONG WITH THESE SPECIFICATIONS AS THOUGH THEY WERE ONE, AND ANYTHING IMPLIED BY THE SPECIFICATIONS SHALL BE INTERPRETED AS ALSO IMPLIED BY THE DRAWINGS AND VICE VERSA. PROVIDE NECESSARY ITEMS FOR A COMPLETE INSTALLATION OF ALL ELECTRICALLY OPERATED EQUIPMENT LISTED IN THE SPECIFICATIONS OR SHOWN ON THE CONTRACT DRAWINGS.
2. THE ARCHITECTURAL, STRUCTURAL, MECHANICAL, PLUMBING AND EQUIPMENT DRAWINGS AND SPECIFICATIONS ARE INCORPORATED INTO, AND BECOME A PART OF THIS DIVISION. THIS CONTRACTOR SHALL EXAMINE ALL SUCH DRAWINGS AND SPECIFICATIONS AND BECOME THOROUGHLY FAMILIAR WITH THE PROVISIONS CONTAINED THEREIN. THE SUBMISSION OF HIS BID SHALL INDICATE SUCH KNOWLEDGE.
3. ELECTRICAL DRAWINGS ARE DIAGRAMMATIC. THEY ARE INTENDED TO SHOW THE APPROXIMATE LOCATIONS OF EQUIPMENT AND CONDUIT. DIMENSIONS GIVEN ON THE PLANS, IN FIGURES, SHALL TAKE PRECEDENCE OVER SCALED DIMENSIONS AND SHALL BE VERIFIED IN THE FIELD. THE ELECTRICAL CONTRACTOR SHALL LAYOUT ALL EQUIPMENT ROOMS TO MAKE SURE THE EQUIPMENT, AS PURCHASED, FITS IN THE ROOM OR SPACE SHOWN. EXACT LOCATION OF ALL EQUIPMENT SHALL BE VERIFIED IN THE FIELD AND ROUTING OF CONDUITS SHALL SUIT FIELD CONDITIONS.
4. UNTIL THE TIME OF INSTALLATION, THE ARCHITECT RESERVES THE RIGHT TO MAKE MINOR CHANGES IN THE LOCATION OF CONDUIT AND EQUIPMENT WITHOUT ADDITIONAL COST TO THE CONTRACT.
5. THE ELECTRICAL DRAWINGS AND SPECIFICATIONS ARE INTENDED TO SUPPLEMENT EACH OTHER. MATERIAL AND LABOR NECESSARY TO THE PROJECT SHALL BE FURNISHED AND INSTALLED EVEN THOUGH NOT SPECIFICALLY MENTIONED IN BOTH. LABOR AND/OR MATERIALS NEITHER SHOWN NOR SPECIFIED, BUT OBVIOUSLY NECESSARY FOR THE COMPLETION AND PROPER FUNCTIONING OF THE SYSTEM, SHALL BE FURNISHED AND INSTALLED BY THE ELECTRICAL CONTRACTOR AT NO ADDITIONAL COST.
6. ARRANGE ALL EQUIPMENT SUBSTANTIALLY AS SHOWN ON THE DRAWINGS. MAKE DEVIATIONS ONLY WHERE NECESSARY TO AVOID INTERFERENCE. CHECK ALL EQUIPMENT SIZES AGAINST AVAILABLE SPACE PRIOR TO SHIPMENT TO AVOID INTERFERENCE.
7. EXAMINE THE WORK OF OTHER TRADES INSOFAR AS THEIR WORK COMES IN CONTACT WITH OR IS COVERED BY THIS WORK. IN NO CASE ATTACH TO, OR FINISH AGAINST ANY DEFECTIVE WORK OR INSTALL WORK IN A MANNER WHICH WILL PREVENT PROPER INSTALLATION OF THE WORK OF OTHER TRADES.
8. ELECTRICAL CONTRACTOR SHALL VERIFY WITH OTHER TRADES ALL ELECTRICAL CHARACTERISTICS OF EQUIPMENT REQUIRING ELECTRICAL CONNECTIONS. CONTRACTOR SHALL VERIFY VOLTAGE, PHASE AND HORSEPOWER AND SHALL NOTIFY ENGINEER OF ANY DISCREPANCIES PRIOR TO START OF WORK. ELECTRICAL CONTRACTOR SHALL PROVIDE DISCONNECTING MEANS AND OVERLOAD PROTECTION FOR ALL EQUIPMENT, UNLESS FURNISHED INTEGRAL WITH EQUIPMENT PACKAGE.
9. IT IS THE INTENT OF THESE DRAWINGS THAT THIS BE A COMPLETE ELECTRICAL JOB. ANY ERRORS OR OMISSIONS SHALL BE BROUGHT TO THE ATTENTION OF THE ARCHITECT, PRIOR TO BIDDING THE JOB, WHO WILL MAKE CLARIFICATIONS IN WRITING.

B. VISIT TO THE SITE:

1. THIS CONTRACTOR SHALL VISIT THE SITE OF THE WORK AND FAMILIARIZE HIMSELF WITH ALL CONDITIONS AFFECTING HIS WORK. THE SUBMISSION OF HIS PROPOSAL SHALL INDICATE SUCH KNOWLEDGE. NO ADDITIONAL PAYMENT SHALL BE MADE ON CLAIMS THAT ARISE FROM A LACK OF KNOWLEDGE OF THE EXISTING CONDITIONS.

C. CODE AND PERMITS:

1. INSTALLATION SHALL BE IN FULL ACCORDANCE WITH ALL CODES, RULES AND REGULATIONS OF MUNICIPAL, CITY, COUNTY, STATE AND PUBLIC UTILITIES AND ALL OTHER AUTHORITIES HAVING JURISDICTION OVER THE PREMISES.
2. COMPLY WITH ANY SPECIFICATION REQUIREMENTS THAT ARE IN EXCESS BUT NOT IN CONFLICT WITH CODE REQUIREMENTS.
3. THE CONTRACTOR SHALL SECURE AND PAY FOR ALL PERMITS, PLAN REVIEWS AND CERTIFICATES OF INSPECTION IN CONNECTION WITH HIS WORK, REQUIRED BY THE FOREGOING AUTHORITIES. BEFORE FINAL PAYMENT OF THE CONTRACT IS ALLOWED, ALL CERTIFICATES SHALL BE DELIVERED TO THE ARCHITECT IN DUPLICATE.
4. ELECTRICAL MATERIAL AND EQUIPMENT SHALL BE LISTED TO A NATIONALLY RECOGNIZED TESTING LABORATORY, SUCH AS UL, CSA, ETL OR APPROVED EQUIVALENT.

D. ELECTRICAL INSPECTION:

1. ALL ELECTRICAL INSPECTIONS SHALL BE BY THE LOCAL TOWN.

E. RECORD DRAWINGS:

1. IMMEDIATELY AFTER THE CONTRACT IS SIGNED, THE CONTRACTOR SHALL OBTAIN A COMPLETE SET OF REPRODUCTIONS OF THE CONTRACT DRAWINGS. THESE WILL BE THE BASIC RECORD DRAWINGS, TO BE DELIVERED TO THE ARCHITECT WITH TWO SETS OF PRINTS, UPON COMPLETION OF THE PROJECT, PRIOR TO REQUEST FOR FINAL PAYMENT. DURING THE PROGRESS OF THE JOB, THE RECORD DRAWINGS SHALL BE CORRECTED FROM MONTH-TO-MONTH TO SHOW THE WORK AS ACTUALLY INSTALLED.

F. STANDARDS AND SUBSTITUTIONS:

1. WHEREVER THE WORDS "APPROVED BY", "APPROVED EQUAL", "AS DIRECTED" OR SIMILAR PHRASES ARE USED IN THE FOLLOWING SPECIFICATIONS, THEY SHALL BE UNDERSTOOD TO REFER TO THE OWNER AS THE APPROVING AGENCY. THE NAME OR MAKE OF ANY EQUIPMENT OR MATERIALS NAMED IN THIS SPECIFICATION (WHETHER OR NOT THE WORDS "OR APPROVED EQUAL" ARE USED) SHALL BE KNOWN AS THE "STANDARD".
2. THESE SPECIFICATIONS ESTABLISH QUALITY STANDARD OF MATERIALS AND EQUIPMENT TO BE PROVIDED. SPECIFIC ITEMS ARE IDENTIFIED BY MANUFACTURER, TRADE NAME OR CATALOG DESIGNATION. THIS CONTRACTOR SHALL SUBMIT HIS BASE BID PRICE BASED UPON STANDARD SPECIFIED EQUIPMENT DESCRIBED HEREIN AND AS DETAILED ON DRAWINGS AND ASSOCIATED CONTRACT DOCUMENTS. THESE SPECIFICATIONS ARE NOT TO BE CONSIDERED PROPRIETARY. THE CONTRACTOR MAY SUBMIT INFORMATION ON MATERIALS AND MANUFACTURERS (OTHER THAN THOSE LISTED) FOR REVIEW BY THE ARCHITECT AND ENGINEER NO LATER THAN TEN (10) DAYS BEFORE BIDS ARE SUBMITTED. IN ADDITION, SAMPLES OF PROPOSED EQUIPMENT MAY BE REQUIRED TO BE SUBMITTED TO THE ENGINEER FOR REVIEW NO LATER THAN TEN (10) DAYS BEFORE BIDS ARE SUBMITTED. MANUFACTURERS OF PRODUCTS ACCEPTED BY THE ARCHITECT AND ENGINEER WILL BE LISTED IN AN ADDENDUM TO THE SPECIFICATIONS AS AN ACCEPTABLE SUBSTITUTION EQUIPMENT ACCEPTED AS DETAILED BELOW AND SHALL BE SHOWN AS A SEPARATE ADD OR DEDUCT PRICE TO BE FACTORED INTO THE BASE BID PRICE BY THE ARCHITECT AND OWNER IF ACCEPTED.
3. SHOULD THE CONTRACTOR PROPOSE TO FURNISH MATERIALS AND EQUIPMENT OTHER THAN THOSE SPECIFIED OR APPROVED BY ADDENDUM, SUBMIT A WRITTEN REQUEST FOR SUBSTITUTIONS TO THE ARCHITECT AT THE BID OPENING. THE REQUEST SHALL BE AN ALTERNATE TO THE ORIGINAL BID; BE ACCOMPANIED WITH COMPLETE DESCRIPTIVE (MANUFACTURER, BRAND NAME, CATALOG NUMBER, ETC.) AND TECHNICAL DATA FOR ALL ITEMS. FAILURE BY THIS CONTRACTOR TO SUBMIT THE REQUISITE DOCUMENTATION DETAILED ABOVE SHALL BE UNDERSTOOD BY THE ARCHITECT AND ENGINEER TO INDICATE THAT SUBSTITUTE EQUIPMENT WILL NOT BE PRESENTED BY THE CONTRACTOR FOR CONSIDERATION. SUCH SUBSTITUTIONS WILL NOT BE CONSIDERED AFTER THE BID OPENING DATE AND DELAY OF PROJECT WILL NOT BE PERMITTED FOR FURTHER INSPECTION AND EVALUATION AFTER THIS DATE.
4. WHERE SUCH SUBSTITUTIONS ALTER THE DESIGN OR SPACE REQUIREMENTS INDICATED ON THE DRAWINGS, INCLUDE ALL ITEMS OF COST FOR THE REVISED DESIGN AND CONSTRUCTION INCLUDING COST OF ALL ALLIED TRADES INVOLVED.
5. ACCEPTANCE OR REJECTION OF THE PROPOSED SUBSTITUTIONS SHALL BE SUBJECT TO APPROVAL OF THE ARCHITECT AND ENGINEER. IF REQUESTED, THE CONTRACTOR SHALL SUBMIT (AT HIS COST) INSPECTION SAMPLES OF BOTH THE SPECIFIED AND PROPOSED SUBSTITUTE ITEMS.
6. IN ALL CASES WHERE SUBSTITUTIONS ARE PERMITTED, THE CONTRACTOR SHALL BEAR ANY EXTRA COST OF EVALUATING THE QUALITY OF THE MATERIAL AND EQUIPMENT TO BE PROVIDED, INCLUDING ALL ARCH/ENGINEER FEES ASSOCIATED WITH CHANGE.

G. TESTING AND PLACING IN SERVICE:

1. ANY MATERIAL OR EQUIPMENT FAILING A TEST SHALL BE REPAIRED OR REPLACED AT THE CONTRACTOR'S EXPENSE.
2. TESTS SHALL INCLUDE THE FOLLOWING:
   a. MEASURE THE LOAD ON EACH PHASE OF THE MAIN SERVICE AND EACH PHASE OF EVERY FEEDER UNDER FULL LOAD CONDITIONS.
   b. MEASURE THE NO-LOAD AND FULL-LOAD VOLTAGES (PHASE TO PHASE, PHASE TO NEUTRAL AND PHASE TO GROUND FOR EACH PHASE OF EACH SERVICE, OF EACH SEPARATELY DERIVED SYSTEM, AND AT EACH PANELBOARD OR TRANSFORMER).
   c. MEASURE THE GROUND RESISTANCE OF THE MAIN SERVICE GROUNDING ELECTRODE AND THE GROUND RESISTANCE OF EACH SEPARATELY DERIVED SYSTEM'S GROUNDING ELECTRODE.
   d. MAKE INSULATION RESISTANCE TESTS ON ALL DRY TYPE TRANSFORMERS AND MOTORS.

H. INTERFERENCES:

1. BEFORE THE INSTALLATION OF ANY ITEM BEGINS, THE ELECTRICAL CONTRACTOR SHALL CAREFULLY ASCERTAIN THAT IT DOES NOT INTERFERE WITH CLEARANCES FOR THE ERECTION OF FINISH BEAMS, COLUMNS, PILASTERS, WALLS OR OTHER STRUCTURAL OR ARCHITECTURAL MEMBERS AS SHOWN ON THE ARCHITECTURAL DRAWINGS. IF ANY WORK IS INSTALLED AND THE ARCHITECTURAL DESIGN CANNOT BE FOLLOWED, THIS CONTRACTOR SHALL, AT HIS OWN EXPENSE, MAKE CHANGES IN HIS WORK AS DIRECTED BY THE ARCHITECT TO PERMIT THE COMPLETION OF THE ARCHITECTURAL WORK IN ACCORDANCE WITH DRAWINGS AND SPECIFICATIONS.
2. IT SHALL BE THE DUTY OF THIS CONTRACTOR TO REPORT ANY INTERFERENCES BETWEEN HIS WORK AND THAT OF ANY OF THE OTHER CONTRACTORS AS SOON AS THEY ARE DISCOVERED. THE ARCHITECT AND / OR ENGINEER SHALL DETERMINE WHICH EQUIPMENT WILL BE RELOCATED, REGARDLESS OF WHICH WAS INSTALLED FIRST. THEIR DECISION WILL BE FINAL.

I. QUALITY ASSURANCE:

1. ALL PRODUCTS SHALL BE NEW AND OF THE TYPE AND QUALITY SPECIFIED. WHERE MATERIALS, EQUIPMENT, APPARATUS OR OTHER PRODUCTS ARE SPECIFIED BY MANUFACTURER, BRAND NAME, TYPE OF CATALOG NUMBER, SUCH DESIGNATION SHALL ESTABLISH THE STANDARDS OF THE DESIRED QUALITY AND STYLE. IT IS THE INTENT OF THESE SPECIFICATIONS TO ESTABLISH A STANDARD OF QUALITY OF MATERIALS AND EQUIPMENT INSTALLED.

J. LABOR:

1. THE ELECTRICAL CONTRACTOR SHALL HAVE COMPETENT SUPERVISION IN RESPONSIBLE CHARGE OF THE WORK, WHO SHALL BE ON THE SITE DURING THE ERECTION OF THE MATERIAL FURNISHED UNDER THESE SPECIFICATIONS AND WHEN THE SYSTEM IS PUT INTO OPERATION. USE ONLY COMPETENT LABOR AND PERFORM IN A FIRST-CLASS MANNER.

K. STORAGE AND PROTECTION:

1. THE ELECTRICAL CONTRACTOR SHALL BE RESPONSIBLE FOR ALL LOSS OR DAMAGE TO THE BUILDING AND ITS CONTENTS CAUSED BY HIS EMPLOYEES OR EQUIPMENT. ALL SUCH DAMAGE SHALL BE REPAIRED OR THE ITEMS REPLACED, TO THE SATISFACTION OF THE ARCHITECT.

L. VERIFICATION OF MEASURMENTS:

1. BEFORE ORDERING ANY MATERIAL OR DOING ANY WORK, THIS CONTRACTOR SHALL VERIFY ALL MEASUREMENTS AT THE BUILDING AND SHALL BE RESPONSIBLE FOR THE CORRECTNESS OF SAME. NO EXTRA CHARGE OR COMPENSATION WILL BE ALLOWED ON ACCOUNT OF THE DIFFERENCE BETWEEN ACTUAL DIMENSIONS AND THE MEASUREMENTS INDICATED ON THE DRAWINGS. ANY DIFFERENCE WHICH MAY BE FOUND, SHALL BE SUBMITTED TO THE ARCHITECT FOR CONSIDERATION, BEFORE PROCEEDING WITH THE WORK.

M. MAINTENANCE AND OPERATION MANUALS:

1. UPON COMPLETION OF THE WORK AND BEFORE REQUEST FOR FINAL PAYMENT, THE CONTRACTOR SHALL DELIVER TO THE ARCHITECT'S ENGINEER, FOUR (4) SETS OF FULL AND COMPLETE DIRECTIONS PERTAINING TO THE OPERATION AND MAINTENANCE OF ALL EQUIPMENT AND SYSTEMS INSTALLED UNDER THIS CONTRACT. THESE DIRECTIONS SHALL BE NEATLY TYPEWRITTEN ON 8 1/2" X 11" SHEETS WITH INDEX TABS, AND SHALL BE ACCOMPANIED BY PRINTS OF THE WORK AS INSTALLED, PARTS LIST DIAGRAMS, ETC., NECESSARY FOR THE GUIDANCE OF THE OWNER.

BASIC ELECTRICAL MATERIALS AND METHODS

A. NAMEPLATES:

1. GENERAL: FURNISH AND MOUNT ON EACH PANELBOARD, SWITCHBOARD (INCLUDING BRANCH SWITCHES), LARGE JUNCTION BOX, SAFETY SWITCH, STARTER, REMOTE CONTROL, PUSH BUTTON STATION, AND ALL SIMILAR CONTROLS, A NAMEPLATE DESCRIPTIVE OF THE EQUIPMENT OR EQUIPMENT CONTROLLED.
2. PROVIDE BLACK AND WHITE NAMEPLATES CONSTRUCTED FROM LAMINATED PHENOLIC WITH A WHITE CENTER CORE. LETTERS SHALL BE ENGRAVED IN THE PHENOLIC TO FORM WHITE LETTERS 3/8" HIGH. FASTEN THE NAMEPLATES WITH SCREWS AND AN ADHESIVE TYPE FASTENER.

B. MOUNTING ACCESSORIES:

1. THIS CONTRACTOR SHALL FURNISH AND INSTALL ALL ANGLE IRON, CHANNEL IRON, RODS, SUPPORTS, HANGERS, CONCRETE OR PLYWOOD REQUIRED TO INSTALL, MOUNT AND SUPPORT ANY ELECTRICAL EQUIPMENT OR DEVICE CALLED FOR ON THE PLANS.
2. SUPPORTING MATERIAL SHALL BE COMPLETE WITH HANGERS, CONNECTORS, BOLTS, CLAMPS AND NECESSARY ACCESSORIES TO MAKE A COMPLETE INSTALLATION. SUPPORTING MATERIAL SHALL BE GALVANIZED, PAINTED OR OTHERWISE SUITABLY FINISHED. PRODUCTS BY BRINKLEY, STEEL CITY OR RACO WILL BE ACCEPTABLE.
3. ALL SURFACE-MOUNTED EQUIPMENT ON BLOCK WALLS SHALL BE MOUNTED ON 3/4" PAINTED PLYWOOD BACKBOARD. ALL FLOOR-MOUNTED EQUIPMENT SHALL BE INSTALLED ON A 4" HIGH CONCRETE HOUSEKEEPING PAD.

C. EXECUTION:

1. THE ELECTRICAL WORK FOR CONSTRUCTION PROPOSED SHALL CONFORM TO ALL FEDERAL (OSHA), STATE, ALL SPECIFIC SAFETY REQUIREMENTS AND THE REQUIREMENTS OF THE CURRENT EDITION OF THE NEC.
2. CHECK THE HVAC AND PLUMBING SPECIFICATIONS FOR ELECTRICAL REQUIREMENTS AND INCLUDE THE SAME IN THE CONTRACT COST.
3. EQUIPMENT CONNECTIONS, STARTERS, DISCONNECT SWITCHES, CONTROL TRANSFORMERS AND PUSHBUTTON STATIONS FOR THE EQUIPMENT FURNISHED BY THE OWNER OR UNDER A SEPARATE CONTRACT SHALL BE INSTALLED AND CONNECTED UNDER THIS DIVISION, AS INDICATED ON THE CONTRACT DRAWINGS.
4. ALL CUTTING, PATCHING, EXCAVATING, BACKFILLING AND CONCRETE WORK RELATED TO THIS CONTRACT WILL BE THE RESPONSIBILITY OF THE ELECTRICAL CONTRACTOR. THIS CONTRACTOR SHALL ASSUME THE RESPONSIBILITY OF PROVIDING THE SLEEVES, CHASES AND OPENINGS NECESSARY FOR THE ELECTRICAL INSTALLATION AND FOR THEIR REPAIR IN AN ACCEPTABLE MANNER, AS DETERMINED BY THE ARCHITECT. ALL HOLES SHALL BE CORE-DRILLED. PROVIDE FIRE STOP IN ALL OPENINGS CREATED THROUGH FIRE-RATED WALLS, FLOORS OR CEILINGS. PROVIDE WATER TIGHT SEALS FOR ALL OPENINGS CREATED THROUGH FOUNDATION WALLS OR EXTERIOR WALLS.
5. THIS CONTRACTOR SHALL BE RESPONSIBLE FOR PROVIDING ALL REQUIRED ACCESS PANELS NECESSARY FOR HIS WORK, COORDINATE WITH ARCHITECT PRIOR TO INSTALLATION.

D. OPENINGS AND CHASES:

1. DETERMINE AND BE RESPONSIBLE FOR PROPER SIZE AND LOCATION OF OPENINGS AND CHASES REQUIRED. INSTALL ALL SLEEVES NECESSARY FOR THE WORK. WHEREVER ANY PIPING PASSES THROUGH ANY WALL, THE OPENING SHALL BE SEALED TIGHT AGAINST THE PIPING BY THIS CONTRACTOR. PIPING THROUGH FOUNDATION WALLS AND ROOFS SHALL BE SEALED WATERTIGHT BY THIS CONTRACTOR.

E. MATERIALS AND WORKMANSHIP:

1. ALL WORK SHALL BE INSTALLED IN A PRACTICAL AND WORKMANLIKE MANNER, BY MECHANICS SKILLED IN THE SEVERAL TRADES NECESSARY.
2. ALL MATERIALS SHALL BE NEW AND FREE FROM DEFECTS AND SHALL BE THE BEST OF THEIR SEVERAL KINDS UNLESS SPECIFIED OR INDICATED ON THE DRAWINGS TO THE CONTRARY.
3. DURING EACH PHASE AND AT THE COMPLETION OF THE CONSTRUCTION, THIS CONTRACTOR SHALL REMOVE ALL DEBRIS AND EXCESS MATERIALS CAUSED BY HIS WORK. HE SHALL LEAVE THE AREA OF OPERATION BROOM CLEAN.
4. ALL ELECTRICAL EQUIPMENT SHALL BEAR THE UNDERWRITERS LABORATORIES LABEL OR ETL LABEL.
5. THIS CONTRACTOR SHALL GUARANTEE HIS WORKMANSHIP AND MATERIAL (LAMPS EXCEPTED) FOR A PERIOD OF ONE YEAR FROM THE DATE OF BUILDING OPENING AND LEAVE HIS WORK IN PERFECT ORDER AT THE COMPLETION. SHOULD DEFECTS DEVELOP WITHIN THE GUARANTEE PERIOD, THE CONTRACTOR SHALL, UPON NOTICE OF THE SAME, REMEDY THE DEFECTS AND HAVE ALL DAMAGES TO OTHER WORK OR FURNISHINGS CAUSED BY THE REPAIRS CORRECTED AT HIS EXPENSE TO THE CONDITION BEFORE SUCH DAMAGE.

F. FIRE STOPPING:

1. FIRE-STOPPING FOR OPENINGS THROUGH FIRE AND SMOKE RATED WALLS AND ALL FLOOR ASSEMBLIES SHALL BE LISTED OR CLASSIFIED BY AN APPROVED INDEPENDENT TESTING LABORATORY FOR "THROUGH-PENETRATION FIRE-STOP SYSTEMS." THE SYSTEM SHALL MEET THE REQUIREMENTS OF "FIRE TESTS OF THROUGH-PENETRATION FIRE-STOPS" DESIGNATED ASTM E814.
2. ACCEPTABLE MANUFACTURERS:
   a. DOW CORNING FIRE-STOP SYSTEM FOAMS AND SEALANTS
   b. NELSON ELECTRIC FIRE-STOP SYSTEM PUTTY, CLK AND WRP
   c. THOMAS & BETTS - S-100 FS500/600
   d. CARBORUNDUM FYRE PUTTY
   e. HILTI FIRESTOP SYSTEMS
3. INSTALLATION OF FIRE-STOPPING FOR OPENINGS THROUGH FIRE AND SMOKE RATED WALLS AND FLOOR ASSEMBLIES SHALL BE AS FOLLOWS:
   a. PROVIDE FIRE-STOP SYSTEM SEALS AT ALL LOCATIONS WHERE PIPING, TUBING, CONDUIT, ELECTRICAL BUSWAYS/CABLES/WIRES, DUCTWORK AND SIMILAR UTILITIES PASS THROUGH OR PENETRATE FIRE RATED WALL OR FLOOR ASSEMBLY. PROVIDE FIRESTOP SEAL BETWEEN SLEEVE AND WALL FOR DRY WALL CONSTRUCTION.
   b. PROVIDE INTUMESCENT INSERT (SPECIFIED TECHNOLOGIES, INC. SERIES EP POWERSHIELD FIRESTOP INSERT, OR APPROVED EQUIVALENT) IN ALL ELECTRICAL SWITCH, OUTLET AND JUNCTION BOXES INSTALLED IN A FIRE RATED WALL ASSEMBLY.
   c. THE MINIMUM REQUIRED FIRE RESISTANCE RATINGS OF THE WALL OR FLOOR ASSEMBLY SHALL BE MAINTAINED BY THE FIRE-STOP SYSTEM. THE INSTALLATION SHALL PROVIDE AN AIR AND WATERTIGHT SEAL.
   d. THE METHODS USED SHALL INCORPORATE QUALITIES THAT PERMIT THE EASY REMOVAL OR ADDITION OF ELECTRICAL CONDUITS OR CABLES WITHOUT DRILLING OR USE OF SPECIAL TOOLS. THE PRODUCT SHALL ADHERE TO ITSELF TO ALLOW REPAIRS TO BE MADE WITH THE SAME MATERIAL AND PERMIT THE VIBRATION, EXPANSION AND/OR CONTRACTION OF ANY ITEMS PASSING THROUGH THE PENETRATION WITHOUT CRACKING, CRUMBLING AND RESULTING REDUCTION IN FIRE RATING.
   e. PROVIDE RIGID STEEL SLEEVES WHERE NON-ARMORED CABLES PASS THROUGH FIRE RATED WALLS AND BARRIERS.

SCOPE OF WORK:

1. THE ELECTRICAL CONTRACTOR SHALL PROVIDE ALL LABOR, MATERIAL, STORAGE, UNPACKING AND PLACEMENT; TO INCLUDE BUT NOT BE LIMITED TO, THE FOLLOWING ITEMS:
   a. COMPLETE BRANCH CIRCUIT WIRING SYSTEM.
   b. COMPLETE POWER WIRING FOR ALL AIR CONDITIONING EQUIPMENT, PLUMBING SYSTEM, HEATING EQUIPMENT, VENTILATING AND EXHAUST EQUIPMENT.
   c. WIRING DEVICES.
   d. COMPLETE LIGHTING FIXTURE INSTALLATION INCLUDING ALL REQUIRED LAMPS.
   e. ILLUMINATED EXIT LIGHT SYSTEM.
   f. LIGHTING CONTROLS.
   g. FIRE ALARM SYSTEM.
   h. GROUNDING OF THE ELECTRICAL SYSTEM.
   i. TESTING OF ALL CABLES AND CIRCUIT WIRING AFTER INSTALLATION.
   j. TELEPHONE AND COMMUNICATION CONDUIT SYSTEM INCLUDING BOXES SHOWN ON THE DRAWINGS AND REQUIRED BY THE LOCAL TELEPHONE COMPANY AND/OR OWNER.
   k. IDENTIFY RACEWAYS AND CABLES WITH COLOR BANDING AS FOLLOWS:
      a). FIRE ALARM SYSTEM: RED
   l. TEMPORARY ELECTRICAL POWER AND LIGHTING AS REQUIRED FOR CONSTRUCTION.

TEMPORARY SERVICE:

1. THE ELECTRICAL CONTRACTOR SHALL FURNISH, INSTALL AND REMOVE AS REQUIRED ALL TEMPORARY POWER AND TEMPORARY LIGHTING IN ALL AREAS AND INDIVIDUAL ROOMS WHEN NEEDED BY THE INDIVIDUAL TRADES IN THE PERFORMANCE OF THEIR WORK. THIS CONTRACTOR SHALL PROVIDE A MINIMUM OF TWENTY (20) FOOTCANDLES OF ILLUMINATION FOR TEMPORARY LIGHTING. ANY ADDITIONAL LIGHTING REQUIRED BY INDIVIDUAL TRADES SHALL BE PROVIDED BY THE INDIVIDUAL TRADES INCLUDING POWER FOR THE LIGHTING. THE ELECTRICAL WORK FOR CONSTRUCTION PURPOSES SHALL CONFORM TO ALL FEDERAL (OSHA), STATE, SPECIFIC SAFETY REQUIREMENTS, AS WELL AS THE REQUIREMENTS OF THE NATIONAL ELECTRIC CODE AND NATIONAL ELECTRICAL SAFETY CODE. THE ELECTRICAL CONTRACTOR SHALL OBTAIN AND PAY FOR ALL REQUIRED APPLICATIONS, PERMITS AND INSPECTIONS PERTAINING TO THIS WORK. THIS COST SHALL BE INCLUDED IN THE CONTRACTOR'S PRICE.
2. NEW LIGHT FIXTURES SHALL NOT BE USED FOR TEMPORARY LIGHTING.

ELECTRIC SERVICE:

1. ELECTRIC SERVICE IS EXISTING SCHEDULED TO REMAIN.

WIRE AND CABLE:

1. UNLESS OTHERWISE SPECIFIED, MC CABLE MAY BE UTILIZED FOR BRANCH WIRING WHEN CONCEALED WITHIN WALLS OR ABOVE FINISHED CEILINGS. EXPOSED INSTALLATIONS ARE NOT PERMITTED.
2. CONDUCTORS SHALL BE ANNEALED COPPER, STRANDED 98% CONDUCTIVITY, 600 V RATED FOR FEEDERS AND BRANCH CIRCUITS, TYPE THHN/THWN INSULATION, MINIMUM #12 AWG SIZE FOR BRANCH CIRCUITS. PROVIDE #10 AWG MINIMUM SIZE FOR BRANCH CIRCUIT RUNS EXCEEDING 100 FEET. ALUMINUM CONDUCTORS SHALL NOT BE USED FOR BRANCH CIRCUITS. ANACONDA, GENERAL CABLE, ROME CABLE OR ACCEPTED EQUAL.
3. COLOR CODE CONDUCTORS (EXCEPT CONTROL AND INSTRUMENTATION CONDUCTORS) AS FOLLOWS:
   a. 240/120V 1ø SYSTEM PHASE A-BLACK; PHASE B-RED; NEUTRAL-WHITE; GROUND-GREEN
   b. 208/120V 3ø SYSTEM PHASE A-BLACK; PHASE B-RED; PHASE C-BLUE; NEUTRAL-WHITE; GROUND-GREEN
   c. 480/277V 3ø SYSTEM PHASE A-BROWN; PHASE B-ORANGE; PHASE C-YELLOW; NEUTRAL-GREY; GROUND-GREEN
4. #12 AND #10 CONDUCTORS SHALL HAVE CONTINUOUS INSULATION COLOR, AS LISTED ABOVE.
5. COLOR CODE CONDUCTORS LARGER THAN ABOVE, WHICH DO NOT HAVE CONTINUOUS INSULATION COLOR BY APPLICATION OF AT LEAST TWO LAPS OF COLORED TAPE ON EACH CONDUCTOR AT ALL POINTS OF ACCESS INCLUDING JUNCTION BOXES. COLOR TAPE SHALL BE THE EQUAL OF 3M PRODUCTS SCOTCH #35.
6. FLEXIBLE CORD SHALL BE HEAVY DUTY TYPE SO WITH AN EQUIPMENT GROUND CONDUCTOR IN ADDITION TO THE CURRENT CARRYING CONDUCTORS.
7. CONTROL CONDUCTORS SHALL BE #14 MINIMUM FOR NEC CLASS I AND #16 FOR NEC CLASS II.
8. CONDUCTORS #8 AWG AND LARGER SHALL BE STRANDED.
9. CONDUCTORS #10 AWG AND SMALLER SHALL BE SOLID.
10. INSTALL SEPARATE NEUTRALS FOR EACH SINGLE PHASE BRANCH CIRCUIT.
11. CONNECT #10 AND SMALLER WIRES WITH CONSTANT PRESSURE EXPANDABLE SPRING TYPE CONNECTORS, "SCOTCHLOK" BY 3M OR B-CAP BY BUCHANAN.
12. CONNECT #8 AND LARGER WIRES WITH COMPRESSION CONNECTORS OR SPLICES AS MANUFACTURED BY BURNDY OR T&B.
13. INSULATE SPLICING CONNECTORS TO AT LEAST 200% OF THE WIRE INSULATION. USE PRE-STRETCHED TUBING CONNECTOR INSULATORS, 3M PST FOR #2 AND LARGER CONDUCTORS.
14. PULL CONDUCTORS USING RECOGNIZED METHODS AND EQUIPMENT LEAVING AT LEAST 6" WIRE AT ALL JUNCTION BOXES FOR CONNECTIONS.
15. CLEANOUT EACH CONDUIT SYSTEM BEFORE PULLING WIRE.
16. PULL CONDUCTORS USING RECOGNIZED METHODS AND EQUIPMENT LEAVING AT LEAST 6" WIRE AT ALL JUNCTION BOXES FOR CONNECTIONS.
17. FORM AND TIE ALL WIRING IN PANELBOARDS.
18. THERE SHALL BE NO WIRENUT JOINTS OR SPLICES MADE INSIDE SWITCHBOARDS/PANELBOARDS.
19. MAKE ALL CONNECTIONS TO DISCONNECT SWITCHES, MOTOR CONTROLLERS, MOTORS AND OTHER EQUIPMENT SHOWN ON THE PLANS. EXIT LIGHTS, FIRE ALARM AND EMERGENCY CIRCUITS SHALL BE INSTALLED IN SEPARATE CONDUIT SYSTEMS. INSTALL A MAXIMUM OF 3 SINGLE PHASE CIRCUITS IN A SINGLE RACEWAY, UNLESS OTHERWISE SPECIFICALLY CALLED FOR (SIX (6) CURRENT CARRYING CONDUCTORS MAXIMUM PLUS GROUND).
20. INSTALL MULTIWIRE BRANCH CIRCUITS PER ALL REQUIREMENTS OF N.E.C. ARTICLE 210.4. HANDLE TIES MUST BE INSTALLED TO IDENTIFY SINGLE-POLE, MULTIWIRE BRANCH CIRCUITS PER ALL REQUIREMENTS OF N.E.C. ARTICLE 240.15(B).
21. BRANCH CIRCUIT WIRE SIZES (AND CONDUITS) SHALL BE INCREASED FROM THOSE INDICATED ON THE PLANS TO PREVENT EXCESSIVE VOLTAGE DROP. BRANCH CIRCUITS SHALL BE INSTALLED WITH WIRES OF SUFFICIENT SIZE SO THAT VOLTAGE DROP BETWEEN THE PANEL AND THE LOADS DOES NOT EXCEED LIMIT OF 3%.

RACEWAYS AND BOXES

A. RACEWAYS (AS APPLICABLE):

1. ALL WIRE SHALL BE RUN IN ACCORDANCE WITH CODE IN CORROSION RESISTANT, RIGID, THREADED, METAL CONDUIT OR ELECTRICAL METALLIC TUBING (E.M.T.) UNLESS OTHERWISE SPECIFICALLY STATED HEREIN.
   a. CONDUIT IN EXTERIOR WALLS, BELOW FLOOR SLAB, OR UNDERGROUND SHALL BE RIGID, THREADED, GALVANIZED, HEAVY WALL TYPE.
   b. CARLON PVC TYPE 40 HEAVY WALL CONDUIT WITH GROUND WIRE MAY BE USED BELOW FLOOR SLAB OR UNDERGROUND IN LIEU OF RIGID, THREADED, GALVANIZED CONDUIT. PVC SCHEDULE 40 CONDUIT SHALL NOT BE RUN IN OR ABOVE FLOOR SLAB. PVC CONDUIT SHALL TERMINATE BELOW FLOOR SLAB WITH RIGID, THREADED METAL CONDUIT ADAPTER. CONDUIT ABOVE SLAB SHALL BE METAL.
   c. CONDUIT RUN EXPOSED TO THE WEATHER SHALL BE HEAVY WALL, METAL THREADED TYPE.
2. CONDUIT SIZE SHALL BE 1/2" MINIMUM.
3. CONDUIT SHALL BE SECURELY FASTENED IN PLACE.
4. ALL CONDUIT SHALL BE CONCEALED IN WALLS, FLOOR AND CEILINGS WHEREVER POSSIBLE. EXPOSED CONDUIT IN FINISHED AREAS WILL NOT BE PERMITTED. EXPOSED CONDUIT WILL BE PERMITTED IN UNFINISHED AREAS WITH THE SPECIFIC APPROVAL OF THE ARCHITECT.
5. USE FLEXIBLE CONDUIT FOR THE CONNECTION TO RECESSED OR SEMI-RECESSED LIGHTING FIXTURES (6' LENGTH MAXIMUM). USE LIQUID TIGHT METAL CONDUIT FOR ALL CONNECTIONS TO MOTORS AND OTHER EQUIPMENT SUBJECT TO VIBRATION AND IN AREAS SUBJECT TO MOISTURE.
6. USE WATERTIGHT JOINTS WITH BURIED AND CONCRETE ENCASED CONDUIT. ALL BURIED CONDUITS OUTSIDE OF BUILDINGS SHALL HAVE A MINIMUM OF 24" OF COVER UNLESS SHOWN OTHERWISE. METAL CONDUITS BURIED IN EARTH SHALL BE PAINTED (TWO COATS) WITH HEAVY ASPHALTUM PAINT.
7. SUPPORT RUNS OF CONDUIT AS DETAILED IN THE APPROPRIATE TABLE OF THE NATIONAL ELECTRICAL CODE (NEC).
8. INSTALL EXPOSED RUNS OF CONDUIT AND CONDUIT ABOVE LAY-IN CEILINGS PARALLEL OR PERPENDICULAR TO THE WALLS, STRUCTURAL MEMBERS OF INTERSECTIONS OF VERTICAL PLANES AND CEILINGS. PROVIDE RIGHT ANGLE TURNS USING FITTINGS OR SYMMETRICAL BENDS. SUPPORT CONDUITS WITHIN 1" OF ALL CHANGES IN DIRECTION.
9. IF CONDUIT IS SUSPENDED, IT SHALL BE SUPPORTED ON TRAPEZE HANGERS WHICH USE "ALL-THREAD" RODS FROM THE STRUCTURAL STEEL. THE USE OF CEILING SUPPORT WIRE OR SIMILAR MATERIAL WILL NOT BE ACCEPTED.
10. INSTALL EMPTY CONDUIT FOR FUTURE USE AS INDICATED ON THE DRAWINGS. CONDUIT SHALL BE COMPLETE WITH JETLINE OR PULL ROPE, JUNCTION/OUTLET BOXES, TILE RINGS AND APPROPRIATE COVER PLATES.
11. PROVIDE PITCHPOCKETS WHERE CONDUITS PENETRATE THE ROOF.
12. THREAD LUBRICATION/SEALANT IS REQUIRED ON OUTDOOR AND UNDERGROUND THREADED METAL JOINTS.
13. INSTALL FIRE SEAL FITTINGS WHERE CONDUITS PENETRATE CONCRETE FLOOR SLABS OR MASONRY WALLS REQUIRED TO BE FIRE RATED.
14. HORIZONTAL PORTION OF CONDUIT EXPOSED ON THE ROOF AND FEEDING EQUIPMENT SHALL NOT BE MORE THAN 5'-0" UNLESS THE WRITTEN APPROVAL FROM ARCHITECT OR ENGINEER IS OBTAINED.

B. PULL & JUNCTION BOXES:

1. INSTALL PULL AND JUNCTION BOXES WHERE SHOWN ON THE DRAWINGS, AND WHERE REQUIRED FOR CHANGES IN DIRECTION, AT JUNCTION POINTS, AND TO FACILITATE WIRE PULLING. FURNISH BOX SIZES IN ACCORDANCE WITH NEC UNLESS LARGER BOXES ARE INDICATED.
2. PROVIDE STEEL BOXES AND REMOVABLE COVERS OF CODE GAGE, HOT ROLLED SHEET STEEL, HOT DIPPED GALVANIZED INSIDE AND OUTSIDE, FOR ABOVE GROUND WORK. FURNISH WEATHERPROOF BOXES WHEN INSTALLED ABOVE GROUND OUTSIDE.
3. PROVIDE CAST IRON BOXES, HOT DIPPED GALVANIZED INSIDE AND OUTSIDE WHERE SHOWN ON THE DRAWINGS. FURNISH REMOVABLE COVERS WITH GASKETS AND STAINLESS STEEL, BRASS OR BRONZE SCREWS.
4. PROVIDE CONCRETE BOXES FOR UNDERGROUND WORK UNLESS OTHERWISE INDICATED ON THE DRAWINGS. FURNISH STEEL FRAMES AND COVERS WITH THE COVER ATTACHED TO THE FRAME WITH HEXAGON HEAD, BRASS OR BRONZE CAP SCREWS, 3/8" DIAMETER. PROVIDE A RUBBER GASKET FOR SEALING BETWEEN THE COVER AND THE FRAME. PAINT THE COVER WITH TWO COATS OF HEAVY ASPHALTUM.
5. PROVIDE SIZE AS REQUIRED FOR NUMBER AND SIZE OF CONDUIT AND CONDUCTORS. COORDINATE DEPTH TO SUIT WALL DEPTH AND CONSTRUCTION. MAXIMUM NUMBER OF CONDUCTORS PERMITTED IN STANDARD BOXES SHALL BE AS LISTED IN N.E.C. INSTALL FLUSH RECESSED WHEREVER POSSIBLE AND SECURELY SUPPORTED FROM BUILDING CONSTRUCTION., O.Z./GEDNEY, CROUSE HINDS, T&B, STEEL CITY, RACO OR ACCEPTED EQUAL.

GROUNDING AND BONDING

A. GENERAL:

1. ALL GROUNDING AND GROUNDING CIRCUITRY SHALL MEET OR EXCEED THE REQUIREMENTS OF NEC 2017, ARTICLE 250. RACEWAY SYSTEMS WHICH INCLUDES ALL METAL CONDUIT, PULLBOXES, JUNCTION BOXES, ENCLOSURES, MOTOR FRAMES, ETC. SHALL BE MADE TO FORM A CONTINUOUS CONDUCTING, PERMANENT GROUND CIRCUIT OF THE LOWEST PRACTICAL IMPEDANCE TO ENHANCE THE SAFE CONDUCTION OF GROUND FAULT CURRENTS AND TO PREVENT OBJECTIONABLE DIFFERENCES IN VOLTAGE BETWEEN METAL CURRENT CARRYING PARTS OF THE ELECTRICAL SYSTEM. PROVIDE A GREEN GROUNDING CONDUCTOR IN ALL CIRCUITS. CONDUIT SYSTEM SHALL NOT BE USED AS THE EQUIPMENT GROUNDING CONDUCTOR. CONDUCTOR SIZE SHALL BE AS REQUIRED BY NEC, ARTICLE 250. ALL EQUIPMENT GROUND BUS, GROUND PADS, FRAMES, ENCLOSURES, ETC SHALL HAVE SURFACES AT THE POINT OF CONNECTION THOROUGHLY CLEANED AND BRIGHTENED JUST PRIOR TO ACTUALLY MAKING THE CONNECTION. TOUCH-UP DAMAGED PAINTED SURFACES. SPLICES IN WIRE OR CABLE GROUNDING CONDUCTORS ARE PROHIBITED. SOLDER PROHIBITED FOR CONNECTIONS.
2. ALL CONDUITS SHALL CONTAIN A CODE-SIZED GROUND WIRE SIZE PER N.E.C. IN ADDITION TO THE CONDUCTORS SHOWN ON THE PLANS. WHERE CIRCUIT CONDUCTORS ARE INCREASED IN SIZE FOR VOLTAGE DROP, THE GROUND WIRE SIZE SHALL BE INCREASED PROPORTIONATELY.
3. ALL GROUNDING SYSTEMS SHALL BE INSTALLED IN A NEAT AND WORKMANLIKE MANNER. ALL METHODS OF CONSTRUCTION THAT ARE NOT SPECIFICALLY DESCRIBED OR INDICATED IN THE CONTRACT DOCUMENTS SHALL BE SUBJECT TO THE CONTROL AND APPROVAL OF THE OWNER'S REPRESENTATIVE.
4. GROUND EACH OUTSIDE LIGHTING POLE SEPARATELY.
5. SEE CONTRACT DOCUMENTS FOR ADDITIONAL GROUNDING INFORMATION SPECIFIC TO THIS PROJECT.

B. CONDUCTORS:

1. EXPOSED GROUNDING CONDUCTORS SUCH AS BARS, STRAPS, CABLES, FLEXIBLE JUMPERS, BRAIDS, SHUNTS, ETC., SHALL BE BARE COPPER UNLESS OTHERWISE CALLED FOR.
2. CONDUCTORS SHALL BE COPPER.
3. PROVIDE CONDUCTORS WITH THHN/THWN INSULATION. SIZES #10 AWG AND SMALLER SHALL BE GREEN IN COLOR. CONDUCTOR SIZES #8 AWG AND LARGER MAY HAVE GREEN TAPED BANDS AT EACH END AND IN ALL PULLBOXES.

C. TESTS:

1. GROUNDS AND GROUNDING SYSTEM SHALL HAVE A RESISTANCE TO SOLID EARTH GROUND NOT TO EXCEED THE FOLLOWING VALUES:
   a. FOR GROUNDING SECONDARY SERVICE NEUTRAL; 25 OHMS
   b. FOR GROUNDING NON-CURRENT CARRYING METAL PARTS ASSOCIATED WITH SECONDARY DISTRIBUTION SYSTEM; 25 OHMS
2. PROVIDING GROUNDING TESTS TO VERIFY THE ABOVE VALUES. WHERE THESE VALUES ARE NOT MET, ADD ADDITIONAL GROUND RODS OR CONNECTIONS IN ORDER TO MEET THESE VALUES.

NOTICE
This document, the property of, prepared and issued by the architect, is submitted for the specific project namely ____________ and the recipient by accepting this document assumes custody and agrees that this document will not be copied or reproduced in part or in whole, and any special features peculiar to this design shall not be incorporated in any other project, unless prior agreement has been obtained in writing.These documents will be returned immediately upon completion of the project or upon the request of the architect.
This document is the exclusive property of the architect, no rights to ownership are transferable, or shall be lost by the filing of this document with any and all public authorities for the purpose of compliance with Codes and or Ordinances, i.e. Building Permit, etc.

EBS ENGINEERING, PC
ENGINEERED BUILDING SYSTEMS
MECHANICAL / ELECTRICAL ENGINEERS
2568 WALDEN AVENUE
SUITE 107
CHEEKTOWAGA, NEW YORK 14225
PHONE: (716) 836-9600
FAX: (716) 836-9636
EMAIL: MAIL@EBSPE.COM
WEBSITE: WWW.EBSPE.COM
COPYRIGHT © 2021 ENGINEERED BUILDING SYSTEMS

Bryant & Stratton
1259 Central Ave.
Albany, NY 12205

ISSUE:
2021-06-29: BID/PERMIT SET

SA PROJECT TEAM: PRINCIPAL P.Silvestri
PROJ. ARCH. S.Hunt DRAFTER ________
JOB CAPT. ________ INTERIORS N.Catuzza

SEAL:

TITLE:
ELECTRICAL SPECIFICATIONS

SILVESTRI ARCHITECTS • PC
1321 MILLERSPORT HWY PH. 716.691.0900
AMHERST, NY 14221 FAX 716.691.4773

SA JOB #: 14082.07
DATE: 6-29-2021
DRAWING #: E-9

WIRING DEVICES

A. GENERAL:
1. PROVIDE WIRING DEVICES, IN TYPES, CHARACTERISTICS, GRADES AND ELECTRICAL RATINGS FOR APPLICATIONS INDICATED WHICH ARE UL LISTED AND WHICH COMPLY WITH NEMA WD 1 AND OTHER APPLICABLE UL AND NEMA STANDARDS.
2. WIRING DEVICE COLOR SHALL BE SELECTED BY ARCHITECT, UNLESS OTHERWISE INDICATED.
3. PROVIDE COVER OR DEVICE PLATES FOR OUTLET BOXES AS FOLLOWS UNLESS OTHERWISE NOTED:
   a. FINISHED AREAS: THERMOPLASTIC – COLOR TO MATCH DEVICE.
   b. UNFINISHED AREAS: ZINC COATED SHEET METAL, ALUMINUM, OR CAST METAL, AS APPROPRIATE FOR THE TYPE OF BOX.
   c. EXTERIOR AREAS: COPPER FREE ALUMINUM WITH GRAY, POWDER EPOXY FINISH, GASKET, WEATHERPROOF, CROUSE–HINDS "WLRD" FOR DUPLEX RECEPTACLES AND "WLRS" FOR SINGLE RECEPTACLES OR EQUAL.
   d. TELEPHONE, COMMUNICATION, AND SIGNAL OUTLET PLATES, SHALL MATCH THOSE USED FOR RECEPTACLES AND SWITCHES. ALL OUTLET AND/OR JUNCTION BOXES SHALL BE COMPLETE WITH A COVER PLATE BY THIS CONTRACTOR.
   e. WHERE DEVICES ARE GANGED, THEY SHALL BE INSTALLED UNDER A COMMON COVERPLATE.
3. LOCATE SWITCHES AND WALL SWITCH SENSORS AT A MAXIMUM HEIGHT OF 4'–0" A.F.F., MEASURED TO CENTER OF BOX, OR NEAREST BLOCK COURSE (WITHIN A.D.A. REQUIREMENTS) UNLESS OTHERWISE INDICATED. THE LONG DIMENSION OF THE SWITCHES SHALL BE VERTICAL. INSTALL ALL SWITCHES ON STRIKE SIDE OF DOOR.
4. LOCATE RECEPTACLES AT A MINIMUM HEIGHT OF 1'–6" A.F.F., MEASURED TO CENTER OF BOX, OR NEAREST BLOCK COURSE (WITHIN A.D.A. REQUIREMENTS), UNLESS NOTED OTHERWISE. THE LONG DIMENSION OF RECEPTACLES SHALL BE VERTICAL.
5. ALL WIRING DEVICES SHALL BE INSTALLED NEATLY AND PARALLEL WITH BUILDING LINES.

B. SUBMITTALS:
1. SUBMIT DEVICE PRODUCT DATA SHEETS IDENTIFYING MANUFACTURE AND MODEL NUMBERS.

C. RECEPTACLES:
1. PROVIDE NEMA CONFIGURATION 5–20R DUPLEX 125 VOLT GROUNDING TYPE RECEPTACLES RATED FOR 20 AMPERES UNLESS OTHERWISE INDICATED ON THE DRAWINGS.
   a. STANDARD RECEPTACLES SHALL BE SPECIFICATION GRADE.
   b. GFCI RECEPTACLES SHALL BE SPECIFICATION GRADE.
   c. RECEPTACLES WITH INTEGRAL USB CARGING PORTS SHALL BE LISTED AND CONSTRUCTED SUCH THAT CLASS CIRCUITRY IS INTEGRAL WITH RECEPTACLE.
2. PROVIDE TAMPER–RESISTANT RECEPTACLE IN THE FOLLOWING AREAS:
   a. DWELLING UNITS
   b. GUESTROOM AND GUEST SUITES.
   c. CHILD CARE FACILITIES.
   d. PRESCHOOLS AND ELEMENTARY EDUCATION FACILITIES.
   e. BUSINESS OFFICES, CORRIDORS, WAITING ROOMS AND THE LIKE IN CLINICS, MEDICAL AND DENTAL OFFICES AND OUTPATIENT FACILITIES.
   f. SUBSET OF ASSEMBLY OCCUPANCIES DESCRIBED IN 518.2 TO INCLUDE PLACES OF WAITING TRANSPORTATION, GYMNASIUMS, SKATING RINKS, AND AUDITORIUMS.
   g. DORMITORIES
3. RECEPTACLES REQUIRING AMPERAGES, VOLTAGES OR CONFIGURATIONS DIFFERENT FROM THE DUPLEX CONVENIENCE RECEPTACLES ABOVE SHALL BE AS INDICATED ON THE DRAWINGS OR AS REQUIRED FOR EQUIPMENT SUPPLIED BY OTHERS.
4. CONNECT WIRING DEVICE GROUNDING TERMINAL TO BRANCH CIRCUIT EQUIPMENT GROUNDING CONDUCTOR.
5. PROVIDE OTHER RECEPTACLES OF A QUALITY, MATERIAL AND WORKMANSHIP EQUAL TO THAT OF ABOVE DESCRIPTIONS.
8. ACCEPTABLE MANUFACTURES INCLUDED EATON/ARROW HART, LEGRAND (P&S), LUTRON, LEVITON OR APPROVED EQUAL. ALL DEVICES SELECTED FOR PROJECT SHALL BE SUPPLIED BY THE SAME MANUFACTURE.

D. WALL SWITCHES:
1. PROVIDE SINGLE–POLE, THREE_WAY, AND FOUR_WAY 20A, 120/277 VOLT HEAVY–DUTY SPECIFICATION GRADE DEVICES WITH COPPER ALLOY CONTACT ARM, HEAVY DUTY BUMPER PADS FOR QUIET, SMOOTH OPERATION, HIGH STRENGTH THERMOPLASTIC POLYCARBONATE TOGGLE, AND SILVER ALLOY CONTACTS.
2. ACCEPTABLE MANUFACTURES INCLUDE EATON/ARROW HART, LUTRON, LEVITON, LEGRAND OR APPROVED EQUAL. ALL DEVICES SELECTED FOR PROJECT SHALL BE SUPPLIED BY THE SAME MANUFACTURE.

E. WALL DIMMER / SWITCHES:
1. PROVIDE SINGLE–POLE, THREE_WAY 120/277 VOLT SPECIFICATION GRADE 0–10V LED DIMMER DEVICES WITH THERMOPLASTIC POLYCARBONATE CONSTRUCTION, SEPERATE ON/OFF CONTROL AND SLIDE ADJUSTER FOR DIMMING. FOR USE WHEN SERVING LED FIXTURES WITH 0–10V DIMMING DRIVERS. INCLUDE LOW–VOLTAGE CONTROL WIRING INSTALLED FROM SENSOR TO DESIGNATED LIGHT FIXTURES FOR DIMMING OPERATION.
2. PROVIDE SINGLE–POLE, THREE_WAY 120/277 VOLT SPECIFICATION GRADE ELECTRONIC LOW–VOLTAGE (ELV) AND/OR CFL–LED COMPATIBLE DIMMER DEVICES WITH THERMOPLASTIC POLYCARBONATE CONSTRUCTION, TOGGLE/ROCKER ON/OFF CONTROL AND SLIDE ADJUSTER FOR DIMMING. FOR USE WHEN SERVING LINE–VOLTAGE LED FIXTURES.
3. ACCEPTABLE MANUFACTURERS INCLUDE EATON/ARROW HART, LUTRON, LEVITON, LEGRAND OR APPROVED EQUAL. ALL DEVICES SELECTED FOR PROJECT SHALL BE SUPPLIED BY THE SAME MANUFACTURE.

G. AUTOMATIC LIGHTING CONTROL DEVICES:
1. ALL LIGHTING CONTROLS MUST BE SELECTED, INSTALLED AND WIRED TO MEET CURRENT LOCAL AND STATE ENERGY CODE REQUIREMENTS (2020 ENERGY CONSERVATION CODE OF NEW YORK). ANY DISCREPANCIES BETWEEN THESE DESIGN DOCUMENTS AND CURRENT ENERGY CODES MUST BE BROUGHT TO THE ENGINEERS ATTENTION PRIOR TO BID SUBMISSION.
2. PROVIDE SINGLE RELAY, DUAL TECHNOLOGY, 120/277 VOLT, OCCUPANCY SENSOR WALL SWITCH, UNLESS OTHERWISE INDICATED IN DESIGN DOCUMENTS. BASIC PROGRAMMING SHALL INCLUDE MANUAL ON, AUTOMATIC OFF WITH THE OCCUPANCY SENSOR TIME DELAY SET FOR 15 MINUTES IN OFFICES, JANITOR CLOSETS, STORAGE RMS ETC. PER IECC. ALTERNATE PROGRAMMING SHALL INCLUDE AUTOMATIC ON, AUTOMATIC OFF WITH THE OCCUPANCY SENSOR TIME DELAY SET FOR 15 MINUTES IN RESTROOMS, CONFERENCE ROOMS, ETC. PER IECC. REMAINING PROGRAMMING OPTIONS SHALL BE FACTORY DEFAULT UNLESS OTHERWISE INDICATED OR REQUIRED.
3. PROVIDE SINGLE RELAY, DUAL TECHNOLOGY, 120/277 VOLT, OCCUPANCY SENSOR DIMMING WALL SWITCH WITH OPTION FOR DAYLIGHT HARVESTING. INCLUDE LOW–VOLTAGE CONTROL WIRING INSTALLED FROM SENSOR TO DESIGNATED LIGHT FIXTURES FOR DIMMING OPERATION. BASIC PROGRAMMING SHALL INCLUDE MANUAL ON, AUTOMATIC OFF WITH THE OCCUPANCY SENSOR TIME DELAY SET FOR 15 MINUTES. DAYLIGHT HARVESTING SHALL BE ACTIVATED IN ROOMS WITH EXTERIOR WINDOWS WHERE COMBINED LIGHTING LOAD IS IN EXCESS OF 150 WATTS FOR THAT ROOM. REMAINING PROGRAMMING OPTIONS SHALL BE FACTORY DEFAULT UNLESS OTHERWISE INDICATED OR REQUIRED.
4. PROVIDE SINGLE ZONE, DUAL TECHNOLOGY 120/277V CEILING MOUNT DIMMING AND PHOTOCONTROL OCCUPANCY SENSOR WITH 360 DEGREE VIEWING ANGLE, UNLESS OTHERWISE INDICATED IN DESIGN DOCUMENTS. PROVIDE ALL REQUIRED POWER PACKS, SLAVE POWER PACKS, CONTROL UNITS, RELAYS, BACKBOXES, MOUNTING PLATES AND OTHER EQUIPMENT NECESSARY FOR PROPER SYSTEM OPERATION. BASIC PROGRAMMING SHALL INCLUDE OCCUPANCY SENSOR TIME DELAY SET FOR 15 MINUTES AND DIMMING SET TO 3V. REMAINING PROGRAMMING OPTIONS SHALL BE FACTORY DEFAULT UNLESS OTHERWISE INDICATED.
5. ACCEPTABLE MANUFACTURERS INCLUDE SENSOR SWITCH, WATTSTOPPER, EATON/ARROW HART, LUTRON, LEVITON, LEGRAND OR APPROVED EQUAL. ALL DEVICES SELECTED FOR PROJECT SHALL BE SUPPLIED BY THE SAME MANUFACTURE.

LIGHTING

A. GENERAL:
1. SEE SHEET E–1 FOR PROJECT LIGHT FIXTURE SPECIFICATIONS.
2. ALL LIGHTING FIXTURES SHALL BE UL LISTED AND BARE THE UL LABEL OF APPROVAL
3. LIGHT FIXTURE HOUSINGS RECESSED WITHIN FIRE RATED CEILINGS MUST BE SUPPLIED WITH FIRE RATED COVERS. UTILIZE TENMAT PRODUCTS OR EQUAL. CONFIRM FIRE RATED CEILING LOCATIONS AND TYPES WITH ARCHITECTURAL DRAWINGS.
4. SET LEVEL, PLUMB, AND SQUARE WITH CEILINGS AND WALLS UNLESS OTHERWISE INDICATED.
5. INSTALL LAMPS IN EACH LUMINAIRE AS NEEDED.
6. FIXTURES SHALL BE SUPPORTED FROM BUILDING STRUCTURE.
7. WHERE FIXTURES ARE INSTALLED ON DRYWALL CEILINGS, THEY SHALL BE SUPPORTED FROM THE CEILING FRAMING SYSTEM OR THE BUILDING STRUCTURE. SUPPORT FROM DRYWALL IS NOT ACCEPTABLE.
8. NFPA 70 REQUIRES MINIMUM SUPPORT FOR FIXTURES. REFER TO "LAY–IN CEILING LIGHTING FIXTURES SUPPORTS" PARAGRAPH BELOW FOR MORE SPECIFIC SUPPORT REQUIREMENTS AND FOR REQUIREMENTS EXCEEDING CODE MINIMUMS. FOR PROJECTS REQUIRING SEISMIC DESIGN, ADDITIONAL SUPPORTS, AND RESTRAINING DEVICES BEYOND THOSE SPECIFIED HERE MAY BE REQUIRED.

B. SUBMITTALS:
1. SUBMIT LIGHT FIXTURE DATA SHEETS IDENTIFYING MANUFACTURE AND MODEL NUMBERS.

C. LAY–IN CEILING LIGHTING FIXTURES SUPPORTS:
1. USE GRID AS A SUPPORT ELEMENT.
2. INSTALL CEILING SUPPORT SYSTEM RODS OR WIRES FOR EACH FIXTURE. LOCATE NOT MORE THAN 6 INCHES FROM LIGHTING FIXTURE CORNERS.
3. SUPPORT CLIPS: FASTEN TO LIGHTING FIXTURES AND TO CEILING GRID MEMBERS AT OR NEAR EACH FIXTURE CORNER WITH CLIPS THAT ARE UL LISTED FOR THE APPLICATION.
4. FIXTURES OF SIZES LESS THAN CEILING GRID: INSTALL AS INDICATED ON REFLECTED CEILING PLANS OR CENTER IN ACOUSTICAL PANEL, AND SUPPORT FIXTURES INDEPENDENTLY WITH AT LEAST TWO 3/4–INCH METAL CHANNELS SPANNING AND SECURED TO CEILING TEES.

D. SUSPENDED LIGHTING FIXTURE SUPPORT:
1. PENDANTS AND RODS: WHERE LONGER THAN 48 INCHES (1200 MM), BRACE TO LIMIT SWINGING.
2. STEM–MOUNTED, SINGLE–UNIT FIXTURES: SUSPEND WITH TWIN–STEM HANGERS.
3. CONTINUOUS ROWS: USE TUBING OR STEM FOR WIRING AT ONE POINT AND TUBING OR ROD FOR SUSPENSION FOR EACH UNIT LENGTH OF FIXTURE CHASSIS, INCLUDING ONE AT EACH END.
4. DO NOT USE GRID AS SUPPORT FOR PENDANT LUMINAIRES. CONNECT SUPPORT WIRES OR RODS TO BUILDING STRUCTURE.

E. GYPSUM CEILING LIGHTING FIXTURE SUPPORT
1. USE CEILING BEAMS AS SUPPORT ELEMENT.
2. INSTALL CEILING SUPPORT SYSTEM WIRES FOR EACH FIXTURE. LOCATE NOT MORE THAN 6 INCHES FROM LIGHTING FIXTURE CORN
3. SUPPORT SCREWS / WIRE TIES: FASTEN TO LIGHTING FIXTURES AND TO CEILING BEAMS AT OR NEAR FIXTURE CORNER

F. IMMEDIATELY PRIOR TO OCCUPANCY, DAMP CLEAN ALL DIFFUSERS, GLASSWARE, FIXTURE TRIMS, REFLECTORS, LAMPS AND REPLACE BURNED OUT LAMPS.

SAFETY SWITCHES & FUSES

A. SWITCHES:
1. SAFETY SWITCHES SHALL BE THE ENCLOSED HEAVY–DUTY TYPE (TYPE HD) WITH QUICK–MAKE, QUICK–BREAK MECHANISM AND EXTERNAL PAD LOCKABLE OPERATING HANDLE.
2. SAFETY SWITCHES SHALL BE RATED FOR 240 OR 600 VOLTS AS APPLICABLE. THEY SHALL BE HORSEPOWER RATED WHEN USED IN MOTOR CIRCUITS.
3. SAFETY SWITCHES SHALL BE FUSIBLE OR NON–FUSIBLE, 2, 3, OR 4 POLE AS INDICATED ON THE DRAWINGS.
4. SAFETY SWITCHES SHALL BE SINGLE THROW UNLESS OTHERWISE INDICATED ON THE DRAWINGS.
5. ENCLOSURES SHALL BE NEMA 1 INDOORS AND NEMA 3R OUTDOORS UNLESS OTHERWISE INDICATED ON DRAWINGS.
6. MANUFACTURER SHALL BE SQUARE D, SIEMENS, OR CUTLER–HAMMER. ALL SAFETY SWITCHES SHALL BE BY ONE MANUFACTURER.
7. MOUNT THE SAFETY SWITCHES SECURELY BETWEEN 3' X 6' LEVELS ABOVE THE FLOOR UNLESS OTHERWISE INDICATED ON THE DRAWINGS.
8. SWITCHES ON BLOCK WALLS SHALL BE MOUNTED ON A 3/4" PLYWOOD BACKBOARD, WHERE LOCATED INDOORS.

B. FUSES:
1. THE CONTRACTOR SHALL FURNISH A COMPLETE SET OF FUSES FOR ALL SWITCHES, PLUS FUSIBLE EQUIPMENT FURNISHED BY OTHER TRADES. UNLESS INDICATED OTHERWISE ON PLANS, THE FUSES SHALL BE OF THE FOLLOWING TYPES:
   a. FUSES 601 TO 6000 AMPS SHALL BE UL CLASS. TRADE TYPE SHALL BE KRP–C AS MANUFACTURED BY THE BUSSMANN COMPANY.
   b. FUSES 1/10 TO 600 AMPS SHALL BE UL CLASS RK1. TRADE TYPE SHALL BE LOW PEAK LPS–RK (600V) AND LPN–RK (250V) AS MANUFACTURED BY BUSSMANN COMPANY.
   c. ALL OTHER FUSES SHALL BE DUAL–ELEMENT CURRENT–LIMITING TYPE WITH 200,000 AMPERES SYMMETRICAL INTERRUPTING CAPACITY.
   d. FUSES SHALL BE MANUFACTURED BY BUSSMANN, GOULD–SHAUMUTT, OR RELIANCE.
   e. SPARE FUSES AMOUNTING TO A DUPLICATE SET OF EACH SIZE INSTALLED SHALL BE TURNED OVER TO THE OWNER UPON COMPLETION OF THE PROJECT. PROVIDE AND PLACE IN A SPARE FUSE CABINET SIMILAR TO BUSSMANN # SFC.
   f. THIS CONTRACTOR SHALL REPLACE ALL FUSES BLOWN DURING CONSTRUCTION.

C. MOTOR CONTROLLERS:
1. TYPE A (FULL VOLTAGE, NON–MAGNETIC, SINGLE PHASE): TOGGLE SWITCH, STAINLESS STEEL ENCLOSURE, THERMOPLASTIC COVERPLATE; SIEMENS CLASS SMF SERIES, OR ACCEPTED EQUAL.
2. TYPE A1 (FULL VOLTAGE, NON–MAGNETIC SINGLE PHASE): SIMILAR TO TYPE A ABOVE, EXCEPT WITH RED PILOT LIGHT; SIEMENS CLASS SMF SERIES, OR ACCEPTED EQUAL.
3. TYPE B (FULL VOLTAGE MAGNETIC): NEMA 1 ENCLOSURE WITH PILOT LIGHT; SIEMENS CLASS 14 SERIES WITH AUXILIARY CONTACTS, OR ACCEPTED EQUAL.
4. TYPE B1 (FULL VOLTAGE, COMBINATION MAGNETIC): FUSIBLE DISCONNECT SWITCH TYPE, NEMA 1 ENCLOSURE, PILOT LIGHT AND HOA IN COVER; SIEMENS CLASS 17 SERIES WITH AUXILIARY CONTACTS, OR ACCEPTED EQUAL.

PANELBOARDS

1. EXISTING PANELBOARDS ARE SCHEDULED TO REMAIN. FIELD VERIFY EXISTING EQUIPMENT MANUFACTURE AS NEEDED.
2. WHEN REQUIRED, PROVIDE NEW QUICK MAKE, QUICK BREAK, THERMAL MAGNETIC, TOGGLE MECHANISM, MOLDED CASE CIRCUIT BREAKERS AS RECOMMENDED BY EQUIPMENT MANUFACTURER. PROVIDE AMPACITY AND POLES AS INDICATED ON PLANS WITH APPROPRIATE AMPERE INTERRUPTING RATING TO MATCH EXISTING EQUIPMENT. MULTIPOLE BREAKERS SHALL HAVE COMMON TRIP. MAKE TO MATCH EXISTING PANELBOARDS.
3. FOR EXISTING PANELBOARDS WHERE CIRCUITS HAVE BEEN UPDATED AS A RESULT OF WORK PERFORMED UNDER THIS CONTRACT, PROVIDE NEW UPDATED PANELBOARD DIRECTORIES TO REFLECT ALL BRANCH CIRCUIT REVISIONS; PROVIDE TYPEWRITTEN WITH ROOM NUMBERS, FUNCTION, ETC. TO POSITIVELY IDENTIFY EACH BRANCH CIRCUIT.

FIRE ALARM SYSTEM SPECIFICATION

A. GENERAL:
1. THE FIRE ALARM SYSTEM IS EXISTING ZONE TYPE. NEW DEVICES MUST BE COMPATIBLE WITH EXISTING SYSTEM.

B. SUBMITTALS:
1. INCLUDE THE FOLLOWING ITEMS FOR REVIEW BY THE ENGINEER OF RECORD AND LOCAL BUILDING DEPARTMENT.
   a. DEVICE DATA SHEETS. INFORMATION SHALL INCLUDE EQUIPMENT MANUFACTURE AND MODEL NUMBERS.
   b. BATTERY CALCULATIONS.
   c. RISER DIAGRAM IDENTIFYING DEVICES, CONDUCTOR TYPES / SIZES, CANDELA RATINGS AND REQUIRED POWER SUPPLIES TO FACILITATE ENTIRE SYSTEM INSTALLATION.
   d. SHOP DRAWINGS INDICATING THE USE OF ALL ROOMS WITH LOCATIONS OF ALARM AND INITIATING DEVICES IN COMPLIANCE WITH DRAWINGS AND SPECIFICATIONS.

NOTE: CAD FILES OF THE FIRE ALARM DESIGN DOCUMENTS WILL BE PROVIDED UPON REQUEST.

C. COMPLIANCE:
1. SYSTEM AND INSTALLATION SHALL BE IN STRICT ACCORDANCE WITH ALL APPLICABLE STANDARDS AND REQUIREMENTS OF THE NFPA INCLUDING:
   a. NFPA 70 – INCLUDING ARTICLE 760 (NEC)
   b. NFPA 72 – COMPLETE
   c. NFPA 101
   d. APPLICABLE REQUIREMENTS OF THE LOCAL TOWN
2. ALL EQUIPMENT SHALL BE "UL" LISTED UNDER THE FIRE PROTECTION DIRECTORY AND SUPPLEMENTS.

D. INSTALLATION:
1. STEEL OUTLET OR METAL BACK BOXES SHALL BE PROVIDED FOR ALL COMPONENTS OF THE SYSTEM.
2. ALL WIRING FOR THIS SYSTEM SHALL BE CONCEALED WITHIN THE BUILDING STRUCTURE AND FINISHES.
3. "UL" LISTED AND APPROVED FIRE ALARM CABLE MAY BE EMPLOYED FOR THE COMPLETE SYSTEM AND SHALL BE FULLY CONCEALED. FIRE ALARM CABLE SHALL BE "PLENUM" RATED CONSISTING OF #14 (MINIMUM SIZE) COPPER CONDUCTORS WITH HYPALON OR TEFLON INSULATION AND JACKET. THE OUTER JACKET SHALL BE RED IN COLOR. WHERE EXPOSED, FIRE ALARM CABLE SHALL BE INSTALLED IN EMT CONDUIT, SIZE AS REQUIRED.
4. FIRE ALARM WIRING SYSTEM SHALL BE CONFIGURED AS CLASS "B".
5. PROVIDE GALVANIZED CHASE NIPPLE (OR SIMILAR PLASTIC FITTING) WHERE CABLES ENTER OUTLET BOXES, BACKBOXES, PANELS ETC.

E. CONTROL PANEL
1. EXISTING ZONE TYPE CONTROL PANEL MANUFACTURED BY FCI (FIRE CONTROL INSTRUMENTS). FIELD VERIFY EXACT MODEL. EXPAND EXISTING ZONE FIRE ALARM CONTROL PANEL AS NEEDED TO INCORPORATE NEW FIRE ALARM DESIGNS.

F. DEVICES:
1. PULLSTATIONS SHALL BE DUAL ACTION, RED IN COLOR LABELED "FIRE".
2. AUDIO/VISUAL (HORN/STROBE) SHALL BE RED IN COLOR LABELED "FIRE" WITH FIELD SELECTABLE CANDELA RATINGS (15, 30, 75, 95, 110) AS REQUIRED FOR SPACES COVERED.
3. VISUAL (STROBE) DEVICES SHALL BE RED IN COLOR LABELED "FIRE". WITH FIELD SELECTABLE CANDELA RATINGS (15, 30, 75, 95, 110) AS REQUIRED FOR SPACES COVERED.
4. SMOKE DETECTORS SHALL BE PHOTOELECTRIC TYPE WITH STANDARD BASE UNLESS OTHERWISE INDICATED.
5. HEAT DETECTORS SHALL BE 190° FIXED TEMPERATURE WITH STANDARD BASE UNLESS OTHERWISE INDICATED.
6. CO DETECTORS SHALL HAVE AN AN AUDIBLE BASE PROVIDING A TEMPORAL 4 NOTIFICATION TONE.
7. SEE 'FIRE ALARM SYSTEM SCHEDULE' ON SHEET E–1 FOR FURTHER INFORMATION ON SYSTEM DEVICES.

G. COMMISSIONING
1. THE COMPLETED FIRE ALARM SYSTEM SHALL BE FULLY TESTED IN THE PRESENCE OF: THE OWNER'S REPRESENTATIVE, CITY REPRESENTATIVE, THE ARCHITECT/ENGINEER, THE CONTRACTOR AND THE FACTORY AUTHORIZED REPRESENTATIVE OF THE MANUFACTURER. UPON COMPLETION OF A SUCCESSFUL TEST, THE CONTRACTOR SHALL SO CERTIFY, IN WRITING, TO THE JURISDICTION HAVING AUTHORITY, OWNER, ARCHITECT AND THE ENGINEER.
2. THE CONTRACTOR SHALL WARRANTY THE COMPLETED FIRE ALARM SYSTEM EQUIPMENT, WIRING AND INSTALLATION, TO BE FREE FROM INHERENT DEFECTS FOR A PERIOD OF ONE YEAR FROM THE DATE OF ACCEPTANCE OF THE CERTIFIED TEST.

COMMUNICATIONS SPECIFICATIONS (TELEPHONE / DATA)

A. GENERAL
1. THIS SPECIFICATION OUTLINES REQUIREMENTS FOR VoIP (DATE / TELEPHONE) SYSTEM.
2. THE CONTRACTOR SHALL PROVIDE ALL MATERIALS AND SERVICE REQUIRED TO PERFORM THE WORK DESIGNATED IN THIS SPECIFICATION. ALL TOOLS, LADDERS, TEST EQUIPMENT AND OTHER ITEMS USED IN THE PERFORMANCE OF THIS WORK SHALL BE PROVIDED BY THE CONTRACTOR.

B. SUBMITTALS
1. SUBMIT PRODUCT DATA SHEETS IDENTIFYING MANUFACTURE AND MODEL NUMBERS.

C. SITE PREPARATION – EXISTING I.T. CLOSET
1. THE CONTRACTOR SHALL FAMILARIZE THEMSELVES WITH EXISTING EQUIPMENT LOCATED IN EXISTING I.T. CLOSETS. CONSULT OWNER I.T. PERSONAL REGARDING EXISTING SYSTEMS, EQUIPMENT AND OPERATIONS.

D. EXISSTING I.T. CLOSET EQUIPMENT RACK
1. EXISTING EQUIPMENT RACKS SHALL REMAIN AND BE REUSED.
2. NEW EQUIPMENT SHALL BE CONFIGURED AS DIRECTED BY OWNER I.T. PERSONAL. IF REQUIRED, THE CONTRACTOR IS TO PROVIDE ALL OF THE FOLLOWING LISTED EQUIPMENT;
   a.) REQUIRED QUANTITY OF 12 OR 24 PORT CAT.6 PATCH PANELS WITH 110 REAR WIRED TO 568B WIRING STANDARD; PREFERABLY WITH CANTERED OR SLANTED FACE FOR EASE OF DISTRIBUTION OF PATCH CORDS. PATCH PANEL QUANTITIES FOR EACH I.T. CLOSET MUST BE FIELD VERIFED BY E.C. BASE ON EXISTING ON EXISTING EQUIPMENT AND SPARE PORTS.
3. HORIZONTAL CABLING FOR RACK WILL BE RUN INTO THE REAR OF THE PATCH PANELS AND EQUIPMENT RACKS SO THAT THE CABLE IS SPLIT, ENTERING AND BEING DISTRIBUTED FROM BOTH SIDES OF THE REAR OF THE RACK. THIS ALLOWS FOR BOTH SIDES OF THE REAR DUCTWORK TO BE UTILIZED FOR CABLE PATHWAY.
4. THE CABLING IS TO EGRESS FROM THE CEILING AND ENTER THE REAR DUCT CAVITIES IN THE MOST DIRECT MANNER.
5. A MINIMUM OF 3' AND NOT MORE THAN 6' OF CABLE SLACK IS TO BE LEFT WITHIN THE DUCTWORK OF EACH RACK AND AN ADDITIONAL 15' SHOULD BE LEFT NEATLY COILED ABOVE THE CEILING TO PROVIDE FOR LIMITED MOVES, ADDS AND CHANGES.
6. ALL CABLE IS TO BE DRESSED AS NEATLY AS POSSIBLE.

E. CABLING:
1. THE CONTRACTOR SHALL PROVIDE CATEGORY 6 PLENUM RATED CABLING WITH BLUE OUTER JACKET.

F. GENERAL HORIZONTAL CABLING:
1. THE CONTRACTOR SHALL NUMBER AND LABEL ALL DATA DROPS TO MEET OWNER REQUIREMENTS. VERIFY WITH OWNER I.T. REPRESENTATIVE IF A SPECIFIC NUMBERING SYSTEM IS TO BE APPLIED.
2. ALL CONNECTORS ARE TO BE PLACED IN FLUSH MOUNTED WALL PLATES. SEE SHEET E–1 FOR FURTHER WALL PLATE SPECIFICATIONS
3. TEN(10) FEET OF SLACK IS TO BE LEFT NEATLY COILED IN THE CEILING DIRECTLY ABOVE THE WALL OUTLETS. THIS IS TO PROVIDE SUFFICIENT SLACK ON CABLING FOR LIMITED FUTURE MOVES, ADDS AND CHANGES.
4. ALL CABLE IS TO BE RUN THROUGH THE BUILDING IN A SYSTEMATIC MANNER IN WHICH THE CABLE PATH FOLLOWS THAT OF THE INTERIOR CORRIDORS UNTIL THE CABLE IS TO BREAK OUT FROM THE GROUP HEADING TOWARDS THE INDIVIDUAL OUTLETS.
5. ALL CABLES SHALL EMANATE FROM PATCH PANELS IN EXISTING I.T. ROOM.
6. CABLING IS TO BE SUPPORTED BY DEDICATED CABLE HANGERS OR LADDERS INSTALLED THROUGHOUT THE BUILDING.
7. ALL CABLES IN GROUPS OF MORE THAN 6 CABLES MUST BE SUPPORTED BY THIS DEDICATED NETWORK OF HANGERS OR LADDERS.
8. IF HANGERS ARE TO BE USED, ALL HANGERS ARE TO BE PLACED AT INTERNALS OF BETWEEN 3 TO 6 FEET APART.
9. ANY CABLE GROUP LESS THAN 6 CABLES CAN BE SUPPORTED BY THE EXISTING STRUCTURES SUCH AS CEILING GRID HANGERS.
10. AVOID LAYING CABLING DIRECTLY ON CEILING GRID / TILE SYSTEM.

G. MANUFACTURE
1. UTILIZE LEVITON PRODUCTS. ALTERNATE MANUFACTURE MUST BE APPROVED BY BOTH THE OWNER AND ENGINEER PRIOR TO SUBMITTAL PHASE.

NOTICE

This document, the property of, prepared and issued by the architect, is submitted for the specific project namely _____ and the recipient by accepting this document assumes custody and agrees that this document will not be copied or reproduced in part or in whole, and any special features peculiar to this design shall not be incorporated in any other project, unless prior agreement has been obtained in writing. These documents will be returned immediately upon completion of the project or upon the request of the architect.
This document is the exclusive property of the architect, no rights to ownership are transferable, or shall be lost by the filing of this document with any and all public authorities for the purpose of compliance with Codes and or Ordinances, i.e. Building Permit, etc.

EBS ENGINEERING, PC
ENGINEERED BUILDING SYSTEMS
MECHANICAL / ELECTRICAL ENGINEERS
2568 WALDEN AVENUE
SUITE 107
CHEEKTOWAGA, NEW YORK 14225
PHONE: (716) 836-9600
FAX: (716) 836-9636
EMAIL: MAIL@EBSPE.COM
WEBSITE: WWW.EBSPE.COM

COPYRIGHT © 2021 ENGINEERED BUILDING SYSTEMS

Bryant & Stratton

1259 Central Ave.

Albany, NY 12205

ISSUE:
2021-06-29: BID/PERMIT SET

SA PROJECT TEAM: PRINCIPAL P.Silvestri
PROJ. ARCH. S.Hunt DRAFTER _____
JOB CAPT. _____ INTERIORS N.Catuzza

SEAL:

TITLE:

ELECTRICAL SPECIFICATIONS

SILVESTRI
ARCHITECTS · PC
1321 MILLERSPORT HWY PH. 716.691.0900
AMHERST, NY 14221 FAX 716.691.4773

SA JOB #: 14082.07

DATE: 6-29-2021

DRAWING #: E-10